Manual EN

Handleiding NL

Manuel FR

Anleitung DE

Manual ES

Användarhandbok SV

Manuele IT

Appendix

Quattro (with firmware xxxx400 or higher)

12 | 5000 | 220 – 100|100 – 230V
24 | 5000 | 120 – 100|100 – 230V
48 | 5000 | 70 – 100|100 – 230V
24 | 8000 | 200 – 100|100 – 230V
48 | 8000 | 110 – 100|100 – 230V
48 | 10000 | 140 – 100|100 – 230V
48 | 15000 | 200 – 100|100 – 230V

1. SAFETY INSTRUCTIONS

In general

Please read the documentation supplied with this product first, so that you are familiar with the safety signs en directions before using the product.
This product is designed and tested in accordance with international standards. The equipment should be used for the designated application only.

WARNING: DANGER OF ELECTRICAL SHOCK
The product is used in combination with a permanent energy source (battery). Even if the equipment is switched off, a dangerous electrical voltage can occur at the input and/or output terminals. Always switch the AC power off and disconnect the battery before performing maintenance. In addition discharge the battery terminals or wait 30 minutes.

This appliance is not designed for use by young children or people who cannot read or understand the manual unless they are under the supervision of a responsible person to ensure that they can use the battery charger safely. Store and use the battery charger out of the reach of children, and ensure that children cannot play with the charger.

The product contains no internal user-serviceable parts. Do not remove the front panel and do not put the product into operation unless all panels are fitted. All maintenance should be performed by qualified personnel.

Never use the product at sites where gas or dust explosions could occur. Refer to the specifications provided by the manufacturer of the battery to ensure that the battery is suitable for use with this product. The battery manufacturer's safety instructions should always be observed.

WARNING: do not lift heavy objects unassisted.

Installation

Read the installation instructions before commencing installation activities. For electrical work, follow the local national wiring standard, regulation and this installation instructions.

This product is a safety class I device (supplied with a ground terminal for safety purposes). **Its AC input and/or output terminals must be provided with uninterruptable grounding for safety purposes. An additional grounding point is located on the outside of the product.** If it can be assumed that the grounding protection is damaged, the product should be taken out of operation and prevented from accidentally being put into operation again; contact qualified maintenance personnel.

Ensure that the connection cables are provided with fuses and circuit breakers. Never replace a protective device by a component of a different type. Refer to the manual for the correct part.

Check before switching the device on whether the available voltage source conforms to the configuration settings of the product as described in the manual.

Ensure that the equipment is used under the correct operating conditions. Never operate it in a wet or dusty environment.
Ensure that there is always sufficient free space around the product for ventilation, and that ventilation openings are not blocked.
Install the product in a heatproof environment. Ensure therefore that there are no chemicals, plastic parts, curtains or other textiles, etc. in the immediate vicinity of the equipment.

Transport and storage

On storage or transport of the product, ensure that the mains supply and battery leads are disconnected.

No liability can be accepted for damage in transit if the equipment is not transported in its original packaging.

Store the product in a dry environment; the storage temperature should range from –20 °C to 60 °C.

Refer to the battery manufacturer's manual for information on transport, storage, charging, recharging and disposal of the battery.

2. DESCRIPTION

2.1 In general

The basis of the Quattro is an extremely powerful sine inverter, battery charger and automatic switch in a compact casing. The Quattro features the following additional, often unique characteristics:

Two AC inputs; integrated switch-over system between shore voltage and generating set
The Quattro features two AC inputs (AC-in-1 and AC-in-2) for connecting two independent voltage sources. For example, two generator sets, or a mains supply and a generator set. The Quattro automatically selects the input where voltage is present. If voltage is present on both inputs, the Quattro selects the AC-in-1 input, to which normally the generating set is connected.

Two AC outputs
Besides the usual uninterruptable output (AC-out-1), an auxiliary output (AC-out-2) is available that disconnects its load in the event of battery operation. Example: an electric boiler that is allowed to operate only if the genset is running or shore power is available.

Automatic and uninterruptible switching
In the event of a supply failure or when the genset is switched off, the Quattro will switch over to inverter operation and take over the supply of the connected devices. This is done so quickly that operation of computers and other electronic devices is not disturbed (Uninterruptible Power Supply or UPS functionality). This makes the Quattro highly suitable as an emergency power system in industrial and telecommunication applications.

Virtually unlimited power thanks to parallel operation
Up to 6 Quattro's can operate in parallel. Six units 48/10000/140, for example, will provide 54 kW / 60 kVA output power and 840 Amps charging capacity.

Three phase capability
Three units can be configured for three-phase output. But that's not all: up to 6 sets of three units can be parallel connected to provide 162 kW / 180 kVA inverter power and more than 2500 A charging capacity.

PowerControl – maximum use of limited shore current
The Quattro can supply a huge charging current. This implies heavy loading of the shore connection or generating set. For both AC inputs, therefore, a maximum current can be set. The Quattro then takes other power users into account, and only uses 'surplus' current for charging purposes.
- Input AC-in-1, to which usually a generating set is connected, can be set to a fixed maximum with DIP switches, with VE.Net or with a PC, so that the generating set is never overloaded.
- Input AC-in-2 can also be set to a fixed maximum. In mobile applications (ships, vehicles), however, a variable setting by means of a Multi Control Panel will usually be selected. In this way the maximum current can be adapted to the available shore current in an extremely simple manner.

PowerAssist – Extended use of your generating set and shore current: the Quattro "co-supply" feature
The Quattro operates in parallel with the generating set or the shore connection. A current shortfall is automatically compensated: the Quattro draws extra power from the battery and helps along. A current surplus is used to recharge the battery.

Three programmable relays
The Quattro is equipped with 3 programmable relays. The relays can be programmed for all kinds of other applications however, for example as a starter relay for a generating set.

Two programmable analog/digital input/output ports
The Quattro is equipped with 2 analog/digital input/output ports.
These ports can be used for several purposes. One application is communication with the BMS of a lithium-ion battery.

Frequency shift
When solar inverters are connected to the output of a Multi or Quattro, the excess solar energy is used to recharge the batteries. Once the absorption voltage is reached, the Multi or Quattro will shut down the solar inverter by shifting the output frequency 1 Hz (from 50 Hz to 51 Hz for example). Once battery voltage has dropped slightly, the frequency returns to normal and the solar inverters will restart.

Built-in Battery Monitor (optional)
The ideal solution when Multi's or Quattro's are part of a hybrid system (diesel generator, inverter/chargers, storage battery, and alternative energy). The built-in battery monitor can be set to start and stop the generator:
- Start at a preset % discharge level, and/or
- start (with a preset delay) at a preset battery voltage, and/or
- start (with a preset delay) at a preset load level.
- Stop at a preset battery voltage, or
- stop (with a preset delay) after the bulk charge phase has been completed, and/or
- stop (with a preset delay) at a preset load level.

Solar energy
The Quattro is extremely suitable for solar energy applications. It can be used for building autonomous systems as well as mains-coupled systems.

Emergency power or autonomous operation on mains failure
Houses or buildings provided with solar panels or a combined micro-scale heating and power plant (a power-generating central heating boiler) or other sustainable energy sources have a potential autonomous energy supply which can be used for powering essential equipment (central heating pumps, refrigerators, deep freeze units, Internet connections, etc.) during a power failure. A problem in this regard, however, is that mains-coupled solar panels and/or micro-scale heating and power plants drop out as soon as the mains supply fails. With a Quattro and batteries, this problem can be solved in a simple manner: the Quattro can replace the mains supply during a power failure. When the sustainable energy sources produce more power than necessary, the Quattro will use the surplus to charge the batteries; in the event of a shortfall, the Quattro will supply additional power from its battery energy resources.

Programmable with DIP switches, VE.Net panel or personal computer
The Quattro is supplied ready for use. Three features are available for changing certain settings if desired:
- The most important settings (including parallel operation of up to three devices and 3-phase operation) can be changed in a very simple manner, using Quattro DIP switches.
- All settings, with exception of the multi-functional relay, can be changed with a VE.Net panel.
- All settings can be changed with a PC and free of charge software, downloadable from our website www.victronenergy.com

2.2 Battery charger

Adaptive 4-stage charging characteristics: bulk – absorption – float – storage
The microprocessor-driven adaptive battery management system can be adjusted for various types of batteries. The adaptive function automatically adapts the charging process to battery use.

The right amount of charge: variable absorption time
In the event of slight battery discharge, absorption is kept short to prevent overcharging and excessive gas formation. After deep discharging, the absorption time is automatically extended in order to fully charge the battery.

Preventing damage due to excessive gassing: the BatterySafe mode
If, in order to quickly charge a battery, a high charge current in combination with a high absorption voltage has been chosen, damage due to excessive gassing will be prevented by automatically limiting the rate of voltage increase once the gassing voltage has been reached.

Less maintenance and aging when the battery is not in use: the Storage mode
The Storage mode kicks in whenever the battery has not been subjected to discharge during 24 hours. In the Storage mode float voltage is reduced to 2,2 V/cell (13,2 V for 12 V battery) to minimise gassing and corrosion of the positive plates. Once a week the voltage is raised back to the absorption level to “equalize” the battery. This feature prevents stratification of the electrolyte and sulphation, a major cause of early battery failure.

Two DC outputs for charging two batteries
The main DC terminal can supply the full output current. The second output, intended for charging a starter battery, is limited to 4 A and has a slightly lower output voltage.

Increasing service life of the battery: temperature compensation
The temperature sensor (supplied with the product) serves to reduce charging voltage when battery temperature rises. This is particularly important for maintenance-free batteries, which could otherwise dry out by overcharging.

Battery voltage sense: the correct charge voltage
Voltage loss due to cable resistance can be compensated by using the voltage sense facility to measure voltage directly on the DC bus or on the battery terminals.

More on batteries and charging
Our book “Energy Unlimited” offers further information on batteries and battery charging, and is available free of charge on our website (see www.victronenergy.com -> Support & Downloads -> General Technical Information). For more information on adaptive charging, please also refer to the General Technical Information our website.

2.3 Self consumption – solar energy storage systems

When the Multi/Quattro is used in a configuration in which it will feed back energy to the grid it is required to enable grid code compliance by selecting the grid code country setting with the VEConfigure tool.
This way the Multi/Quattro can comply to the local rules.
Once set, a password will be required to disable grid code compliance or change grid code related parameters.

If the local grid code is not supported by the Multi/Quattro an external certified interface device should be used to connect the Multi/Quattro to the grid.

The Multi/Quattro can also be used as a bidirectional inverter operating parallel to the grid, integrated into a customer designed system (PLC or other) that takes care of the control-loop and grid measurement, see
http://www.victronenergy.com/live/system_integration:hub4_grid_parallel

Special note for Australian customers: IEC62109.1 certification and CEC approval for off-grid use does NOT imply approval for grid-interactive installations. Additional certification to IEC 62109.2 and AS 4777.2.2015 are required before grid-interactive systems can be implemented. Please check Clean Energy Council website for current approvals.

3. OPERATION

3.1 “On/Off/Charger Only Switch”

When switched to “on”, the product is fully functional. The inverter will come into operation and the LED “inverter on” will light up.

An AC voltage connected to the “AC in” terminal will be switched through to the “AC out” terminal, if within specifications. The inverter will switch off, the “mains on” LED will light up and the charger commences charging. The “bulk”, “absorption” or “float” LED’s will light up, depending on the charger state.
If the voltage at the “AC-in” terminal is rejected, the inverter will switch on.
When the switch is switched to “charger only”, only the battery charger of the Quattro will operate (if mains voltage is present). In this mode input voltage also is switched through to the “AC out” terminal.

NOTE: When only the charger function is required, ensure that the switch is switched to “charger only”. This prevents the inverter from being switched on if the mains voltage is lost, thus preventing your batteries from running flat.

3.2 Remote control

Remote control is possible with a 3-way switch or with a Multi Control panel.
The Multi Control panel has a simple rotary knob with which the maximum current of the AC input can be set: see PowerControl and PowerAssist in Section 2.

3.3 Equalisation and forced absorption

3.3.1 Equalisation

Traction batteries require regular additional charging. In the equalisation mode, the Quattro will charge with increased voltage for one hour (1 V above the absorption voltage for a 12 V battery, 2 V for a 24 V battery), and with charging current limited to 1/4 of the set value. **The “bulk” and “absorption” LED’s flash intermittently.**

Equalisation mode supplies a higher charging voltage than most DC consuming devices can cope with. These devices must be disconnected before additional charging takes place.

3.3.2 Forced absorption

Under certain circumstances, it can be desirable to charge the battery for a fixed time at absorption voltage level. In Forced Absorption mode, the Quattro will charge at the normal absorption voltage level during the set maximum absorption time. **The “absorption” LED lights.**

3.3.3 Activating equalisation or forced absorption

The Quattro can be put into both these states from the remote panel as well as with the front panel switch, provided that all switches (front, remote and panel) are set to “on” and no switches are set to “charger only”.
In order to put the Quattro in this state, the procedure below should be followed.

If the switch is not in the required position after following this procedure, it can be switched over quickly once. This will not change the charging state.

NOTE: *Switching from “on” to “charger only” and back, as described below, must be done quickly. The switch must be toggled such that the intermediate position is 'skipped', as it were. If the switch remains in the “off” position even for a short time, the device may be turned off. In that case, the procedure must be restarted at step 1. A certain degree of familiarisation is required when using the front switch on the Compact in particular. When using the remote panel, this is less critical.*

Procedure:
- Check whether all switches (i.e. front switch, remote switch or remote panel switch if present) are in the “on” position.
- Activating equalisation or forced absorption is only meaningful if the normal charging cycle is completed (charger is in 'Float').
- To activate:
a. Switch rapidly from “on” to “charger only” and leave the switch in this position for ½ to 2 seconds.
b. Switch rapidly back from “charger only” to “on” and leave the switch in this position for ½ to 2 seconds.
c. Switch once more rapidly from “on” to “charger only” and leave the switch in this position.
- On the Quattro (and, if connected, on the MultiControl panel) the three LED’s “Bulk”, “Absorption” and “Float” will now flash 5 times.
- Subsequently, the LED’s “Bulk”, “Absorption” and “Float” will each light during 2 seconds.
a. If the switch is set to “on” while the “Bulk” LED lights, the charger will switch to equalisation.
b. If the switch is set to “on” while the “Absorption” LED lights, the charger will switch to forced absorption.
c. If the switch is set to “on” after the three LED sequence has finished, the charger will switch to “Float”.
d. If the switch has not been moved, the Quattro’s will remain in “charger only’ mode and switch to “Float”.

3.4 LED indications and their meaning

○ LED off
☼ LED flashes
● LED lights

Inverter

charger		inverter
○ mains on	on	● inverter on
○ bulk	off	○ overload
○ absorption	charger only	○ low battery
○ float		○ temperature

The inverter is on, and supplies power to the load.

charger		inverter
○ mains on	on	● inverter on
○ bulk	off	☼ overload
○ absorption	charger only	○ low battery
○ float		○ temperature

The nominal power of the inverter is exceeded. The “overload” LED flashes.

charger		inverter
○ mains on	on	○ inverter on
○ bulk	off	● overload
○ absorption	charger only	○ low battery
○ float		○ temperature

The inverter is switched off due to overload or short circuit.

charger		inverter
○ mains on	on	● inverter on
○ bulk	off	○ overload
○ absorption	charger only	☼ low battery
○ float		○ temperature

The battery is almost empty.

charger		inverter
○ mains on	on	○ inverter on
○ bulk	off	○ overload
○ absorption	charger only	● low battery
○ float		○ temperature

The inverter is switched off due to low battery voltage.

charger		inverter
○ mains on	on	● inverter on
○ bulk	off	○ overload
○ absorption	charger only	○ low battery
○ float		☼ temperature

The internal temperature is reaching a critical level.

charger		inverter
○ mains on	on	○ inverter on
○ bulk		○ overload
○ absorption	off	○ low battery
○ float	charger only	● temperature

The inverter is switched off due to excessively high internal temperature.

charger		inverter
○ mains on	on	● inverter on
○ bulk		☼ overload
○ absorption	off	☼ low battery
○ float	charger only	○ temperature

– If the LEDs flash alternately, the battery almost empty and nominal power is exceeded.
– If “overload” and “low battery” flash simultaneously, there is an excessively high ripple voltage at the battery connection.

charger		inverter
○ mains on	on	○ inverter on
○ bulk		● overload
○ absorption	off	● low battery
○ float	charger only	○ temperature

The inverter is switched off due to an excessively high ripple voltage on the battery connection.

Battery charger

charger		inverter
● mains on	on	○ inverter on
● bulk	off	○ overload
○ absorption		○ low battery
○ float	charger only	○ temperature

The AC voltage on AC-in-1 or AC-in-2 is switched through, and the charger operates in bulk phase.

charger		inverter
● mains on	on	○ inverter on
● bulk	off	○ overload
● absorption		○ low battery
○ float	charger only	○ temperature

The AC voltage on AC-in-1 or AC-in-2 is switched through and the charger operates, but the set absorption voltage has not yet been reached (battery protection mode)

charger		inverter
● mains on	on	○ inverter on
○ bulk	off	○ overload
● absorption		○ low battery
○ float	charger only	○ temperature

The AC voltage on AC-in-1 or AC-in-2 is switched through, and the charger operates in absorption phase.

charger		inverter
● mains on	on	○ inverter on
○ bulk	off	○ overload
○ absorption		○ low battery
● float	charger only	○ temperature

The AC voltage on AC-in-1 or AC-in-2 is switched through, and the charger operates in float or storage phase.

charger		inverter
● mains on	on	○ inverter on
☼ bulk	off	○ overload
☼ absorption		○ low battery
○ float	charger only	○ temperature

The AC voltage on AC-in-1 or AC-in-2 is switched through, and the charger operates in equalisation mode.

Special indications

Set with limited input current

charger			inverter
☼ mains on	on	○ inverter on	
○ bulk		○ overload	
○ absorption	off	○ low battery	
○ float	charger only	○ temperature	

Occurs only if PowerAssist is disabled.
The AC voltage on AC1-in-1 or AC-in-2 is switched through. The AC-input current is equal to the load current. The charger is down-controlled to 0A.

Set to supply additional current

charger			inverter
● mains on	on	☼ inverter on	
○ bulk		○ overload	
○ absorption	off	○ low battery	
○ float	charger only	○ temperature	

The AC voltage on AC-in-1 or AC-in-2 is switched through, but the load demands more current than the mains can supply. The inverter is now switched on to supply additional current.

For the latest and most up to date information about the blink codes, please refer to the Victron Toolkit app.
Click on or scan the QR code to get to the Victron Support and Downloads/Software page.

4. INSTALLATION

This product may only be installed by a qualified electrician.

4.1 Location

The Quattro should be installed in a dry, well-ventilated location, as close as possible to the batteries. The device should be surrounded by a free space of at least 10 cm for cooling purposes.

An excessively high environmental temperature has the following consequences:
- shorter lifecycle
- lower charging current
- lower peak power or full inverter shut off.

Never place the device directly above the batteries.

The Quattro is suitable for wall mounting. A solid surface, suitable for the weight and dimensions of the product must be available (e.g., concrete, or masonry). For mounting purposes, a hook and two holes are provided at the back of the casing (see appendix G). The device can be fitted either horizontally or vertically. For optimal cooling, vertical fitting is preferred.

CAUTION
When integrating inverter/chargers with generators in a single enclosure (hybrid generators), using shock mounts is mandatory. They mitigate damage risk to the inverter/charger by absorbing the generator's operational energy, thus extending component lifespan.
Key criteria for selecting shock mounts include:

- Selection is based on the specific generator vibration frequency ranges to be isolated.
- The shock mounts must bear the equipment's weight without impairing functionality.

The inner part of the device should remain well accessible after installation.

The distance between the Quattro and the battery should be as short as possible to reduce voltage loss across the battery leads to a minimum.

Install the product in a heatproof environment.
Ensure therefore that there are no chemicals, plastic parts, curtains or other textiles, etc. in the direct vicinity.

The Quattro has no internal DC fuse. The DC fuse should be installed outside the Quattro.

4.2 Connecting the battery cables

In order to use the full potential of the Quattro, batteries of sufficient capacity and battery cables with the correct cross-section should be used. To isolate the batteries from the Quattro a disconnect device adequate for the rating should be used.

See table:

	12/5000/200	24/5000/120	48/5000/70	24/8000/200	48/8000/110	48/10000/140	48/15000/200
Recommended battery capacity (Ah)	800–2400	400–1400	200–800	400–1400	200–800	250 - 1000	400 - 1500
Recommended DC fuse	800 A	400 A	200 A	500 A	300 A	400 A	600 A
Recommended cross-section (mm^2) per + and - connection terminal *, **							
0 – 5 m***	2x 120 mm^2	2x 50 mm^2	1x 70 mm^2	2x 70 mm^2	2x 50 mm^2	2x 50 mm^2	2x 95 mm^2
5 -10 m***		2x 95 mm^2	2x 70 mm^2	2x 120 mm^2	2x 95 mm^2	2x 95 mm^2	2x 150 mm^2

* Follow local installation rules.
** Do not locate battery cables in a closed conduit.
*** "2x" means two positive and two negative cables.

Procedure
To connect the battery cables, follow the procedure below:

Use a torque wrench with insulated box spanner in order to avoid shorting the battery.
Maximum torque: 14 Nm

- Remove the DC fuse.
- Loosen the four lower front panel screws at the front of the unit, and remove the lower front panel.
- Connect the battery leads: + (red) to the right-hand terminal and - (black) to the left-hand terminal, use M8 cable lugs. (see appendix A).
- Tighten the connections after mounting the fastening parts.
- Tighten the nuts well for minimal contact resistance.
- Replace the DC fuse only after completing the whole installation procedure.

4.3 Connecting AC cables

The Quattro is a safety class I product (supplied with an ground terminal for safety purposes), only a TN-S grounding system is allowed). **Its AC input and/or output terminals and/or grounding point on the outside of the product must be provided with an uninterruptable grounding point for safety purposes. See the following instructions in this regard.**

The Quattro is provided with a ground relay (see appendix) that **automatically connects the N output to the casing if no external AC supply is available**. If an external AC supply is provided, the ground relay will open before the input safety relay closes (relay H in appendix B). This ensures the correct operation of an earth leakage circuit breaker that is connected to the output.
- In a fixed installation, an uninterruptable grounding can be secured by means of the grounding wire of the AC input. Otherwise the casing must be grounded.
- In a mobile installation (for example, with a shore current plug), interrupting the shore connection will simultaneously disconnect the grounding connection. In that case, the casing must be connected to the chassis (of the vehicle) or to the hull or grounding plate (of the boat).
- For all AC connections use M6 cable lugs.
- In general, the connection described above to shore connection grounding is not recommended for boats because of galvanic corrosion. The solution to this is using an isolating transformer.

The inverter does incorporate a mains frequency isolating transformer. This precludes the possibility of DC current at any AC port. Therefore type A RCD's can be used. The RCD must comply to IEC 61008-1 or IEC 61009-1 or to AS/NZS 61800.1 and AS/NZS 61009.1

AC-in-1 (see appendix A, maximum torque: 7 Nm)
If AC voltage is present on these terminals, the Quattro will use this connection. Generally a generator will be connected to AC-in-1. An appropriate and readily accessible disconnect device shall be incorporated in the fixed wiring
The AC-in-1 input must be protected by a fuse or magnetic circuit breaker rated at 100 A or less, and cable cross-section must be sized accordingly. If the input AC supply is rated at a lower value, the fuse or magnetic circuit breaker should be down sized accordingly.

AC-in-2 (see appendix A, maximum torque: 7 Nm)
If AC voltage is present on these terminals, the Quattro will use this connection, **unless voltage is also present on AC-in-1. The Quattro will then automatically select AC-in-1.** Generally the mains supply or shore voltage will be connected to AC-in-2.
The AC-in-2 input must be protected by a fuse or magnetic circuit breaker rated at 100 A or less, and cable cross-section must be sized accordingly. If the input AC supply is rated at a lower value, the fuse or magnetic circuit breaker should be down sized accordingly.
Note: The Quattro may not start when AC is present only on AC-in-2, and DC battery voltage is 10 % or more below nominal (less than 11 Volt in case of a 12 Volt battery).
Solution: connect AC power to AC-in-1, or recharge the battery.

AC-out-1 (see appendix A, maximum torque: 7 Nm)
The AC output cable can be connected directly to the terminal block "AC-out".
With its PowerAssist feature the Quattro can add up to 5, 8, 10 or 15 kVA (forexample 10.000 / 230 = 43 A) to the output during periods of peak power requirement.
Together with a maximum input current of 100 A this means that the output can supply up to 100 + 21 = 121 A (5 kVA models), 100 + 35 = 135 A (8 kVA models), 100 + 43 = 143 A (10 kVA model) and 100 + 65 = 165 A (15 kVA model).
An earth leakage circuit breaker and a fuse or circuit breaker rated to support the expected load must be included in series with the output, and cable cross-section must be sized accordingly. The maximum rating of the fuse or circuit breaker is 125 A (5 kVA models), 135 A (8 kVA), 143 A (10 kVA) resp. 165 A (15 kVA).

AC-out-2 (see appendix A, maximum torque: 7 Nm)
A second output is available that disconnects its load in the event of battery operation. On these terminals, equipment is connected **that should operate only if AC voltage is available on AC-in-1 or AC-in-2**, e.g. an electric boiler or an air conditioner. The load on AC-out-2 is disconnected immediately when the Quattro switches to battery operation. After AC power becomes available on AC-in-1 or AC-in-2, the load on AC-out-2 will be reconnected with a delay of approximately 2 minutes. This to allow a genset to stabilise.
AC-out-2 can support loads of up to 50 A. An earth leakage circuit breaker and fuse rated at max. 50 A must be connected in series with AC-out-2.

Procedure
Use three-core cable. The connection terminals are clearly encoded:
PE: earth
N: neutral conductor
L: phase/live conductor

4.4 Connection options

4.4.1 Starter battery (connection terminal E, see appendix A)
The Quattro has a connection for charging a starter battery. Output current is limited to 4 A.
(not available on 48 V models)

4.4.2 Voltage sense (connection terminal E, see appendix A)
For compensating possible cable losses during charging, two sense wires can be connected with which the voltage direct on the battery or on the positive and negative distribution points can be measured. Use at least wire with a cross-section of 0,75 mm^2.
During battery charging, the Quattro will compensate the voltage drop over the DC cables to a maximum of 1 Volt (i.e. 1 V over the positive connection and 1 V over the negative connection). If the voltage drop threatens to become larger than 1 V, the charging current is limited in such a way that the voltage drop remains limited to 1 V.

4.4.3 Temperature sensor (connection terminal E, see appendix A)
For temperature-compensated charging, the temperature sensor (supplied with the Quattro) can be connected. The sensor is isolated and must be fitted to the negative terminal of the battery.

4.4.4 Remote control
The Quattro can be remotely controlled in two ways:
- With an external switch (connection terminal H, see appendix A). Operates only if the switch on the Quattro is set to “on”.
- With a remote control panel (connected to one of the two RJ48 sockets B, see appendix A). Operates only if the switch on the Quattro is set to “on”.
Using the remote control panel, only the current limit for AC-in-2 can be set (in regard to PowerControl and PowerAssist).
The current limit for AC-in-1 can be set with DIP switches or by means of software.

Only one remote control can be connected, i.e. either a switch or a remote control panel.

4.4.5. Programmable relays (connection terminal I and E (K1 and K2), see appendix A
The Quattro is equipped with 3 programmable relays. The relay that controls terminal I is set as an alarm relay (default setting). The relays can be programmed for all kinds of other applications, for example to start a generator (VEConfigure software needed).

4.4.6 Auxiliary AC output (AC-out-2)
Besides the usual uninterruptable output (AC-out-1), a second output (AC-out-2) is available that disconnects its load in the event of battery operation. Example: an electric boiler or air conditioner that is allowed to operate only if the genset is running or shore power is available.
In case of battery operation, AC-out-2 is switched off immediately. After the AC supply has become available, AC-out-2 is reconnected with a delay of 2 minutes, this allow a genset to stabilise prior to connecting a heavy load.

4.4.7 Connecting Quattro’s in parallel (see appendix C)
The Quattro can be connected in parallel with several identical devices. To this end, a connection is established between the devices by means of standard RJ45 UTP cables. The system (one or more Quattro’s plus optional control panel) will require subsequent configuration (see Section 5).
In the event of connecting Quattro units in parallel, the following requirements must be met:
- A maximum of 6 units connected in parallel.
- Only identical devices with the same power ratings may be connected in parallel.
- Battery capacity should be sufficient.
- The DC connection cables to the devices must be of equal length and cross-section.
- If a positive and a negative DC distribution point is used, the cross-section of the connection between the batteries and the DC distribution point must at least equal the sum of the required cross-sections of the connections between the distribution point and the Quattro units.
- Place the Quattro units close to each other, but allow at least 10 cm for ventilation purposes under, above and beside the units.
- UTP cables must be connected directly from one unit to the other (and to the remote panel). Connection/splitter boxes are not permitted.
- A battery-temperature sensor need only be connected to one unit in the system. If the temperature of several batteries is to be measured, you can also connect the sensors of other Quattro units in the system (with a maximum of one sensor per Quattro). Temperature compensation during battery charging responds to the sensor indicating the highest temperature.
- Voltage sensing must be connected to the master (see Section 5.5.1.4).
- Only one remote control means (panel or switch) can be connected to the system.

4.4.8 Three-phase configuration (see appendix C)
Quattro’s can also be used in 3-phase wye (Y) configuration. To this end, a connection between the devices is made by means of standard RJ45 UTP cables (the same as for parallel operation). The system (Quattro’s plus an optional control panel) will require subsequent configuration (see Section 5).
Pre-requisites: see Section 4.4.7.
Note: the Quattro is not suitable for 3-phase delta (Δ) configuration.

5. CONFIGURATION

- Settings may only be changed by a qualified electrical engineer.
- Read the instructions thoroughly before implementing changes.
- During setting of the charger, the DC fuse in the battery connections must be removed.

5.1 Standard settings: ready for use

On delivery, the Quattro is set to standard factory values. In general, these settings are selected for single-unit operation. Settings, therefore, do not require changing in the event of stand-alone use.

Warning: Possibly, the standard battery charging voltage is not suitable for your batteries! Refer to the manufacturer's documentation, or to your battery supplier!

Standard Quattro factory settings	
Inverter frequency	50 Hz
Input frequency range	45 - 65 Hz
Input voltage range	180 - 265 VAC
Inverter voltage	230 VAC
Stand-alone / parallel / 3-phase	stand-alone
AES (Automatic Economy Switch)	off
Ground relay	on
Charger on/ off	on
Charging characteristics	four-stage adaptive with BatterySafe mode
Charging current	75 % of the maximum charging current
Battery type	Victron Gel Deep Discharge (also suitable for Victron AGM Deep Discharge)
Automatic equalisation charging	off
Absorption voltage	14.4 / 28.8 / 57.6 V
Absorption time	up to 8 hours (depending on bulk time)
Float voltage	13.8 / 27.6 / 55.2 V
Storage voltage	13.2 V (not adjustable)
Repeated absorption time	1 hour
Absorption repeat interval	7 days
Bulk protection	on
Generator (AC-in-1) / shore current (AC-in-2)	50 A/16 A (default setting, adjustable current limit for PowerControl and PowerAssist functions)
UPS feature	on
Dynamic current limiter	off
WeakAC	off
BoostFactor	2
Programmable relay (3x)	alarm function
PowerAssist	on
Analog/digital input/output ports	programmable
Frequency shift	off
Built-in Battery Monitor	optional

5.2 Explanation of settings

Settings that are not self-explanatory are described briefly below. For further information, please refer to the help files in the software configuration programs (see Section 5.3).

Inverter frequency
Output frequency if no AC is present at the input.
Adjustability: 50 Hz; 60 Hz

Input frequency range
Input frequency range accepted by the Quattro. The Quattro synchronises within this range with the voltage present on AC-in-1 (priority input) or AC-in-2. Once synchronised, the output frequency will be equal to the input frequency.
Adjustability: 45 – 65 Hz; 45 – 55 Hz; 55 – 65 Hz

Input voltage range
Voltage range accepted by the Quattro. The Quattro synchronises within this range with the voltage present on AC-in-1 (priority input) or on AC-in-2. After the back feed relay has closed, output voltage will be equal to input voltage.
Adjustability:
Lower limit: 180 – 230 V
Upper limit: 230 – 270 V

Note: the standard lower limit setting of 180 V is intended for connection to a weak mains supply, or to a generator with unstable AC output. This setting may result in a system shut down when connected to a “brushless, self excited, externally voltage regulated, synchronous AC generator” (synchronous AVR generator). Most generators rated at 10 kVA or more are synchronous AVR generators. The shut down is initiated when the generator is stopped and revs down while the AVR simultaneously “tries” to keep the output voltage of the generator at 230 V.
The solution is to increase the lower limit setting to 210 VAC (the output of AVR generators is generally very stable), or to disconnect the Quattro from the generator when a generator stop signal is given (with help of an AC contactor installed in series with the generator).

Inverter voltage
Output voltage of the Quattro in battery operation.
Adjustability: 210 – 245 V

Stand-alone / parallel operation / 2-3 phase setting
Using several devices, it is possible to:
- increase total inverter power (several devices in parallel)
- create a split-phase system (only for Quattro units with 120 V output voltage)
- create a 3-phase system.

To this end, the devices must be mutually connected with RJ45 UTP cables. Standard device settings, however, are such that each device operates in stand-alone operation. Reconfiguration of the devices is therefore required.

AES (Automatic Economy Switch)
If this setting is turned “on”, the power consumption in no-load operation and with low loads is decreased by approx. 20 %, by slightly “narrowing” the sinusoidal voltage. Not adjustable with DIP switches. Applicable in stand-alone configuration only.

Search Mode
Instead of the AES mode, the search mode can also be chosen (with help of VEConfigure only).
If search mode is “on”, the power consumption in no-load operation is decreased by approx. 70 %. In this mode the Quattro, when operating in inverter mode, is switched off in case of no load or very low load, and switches on every two seconds for a short period. If the output current exceeds a set level, the inverter will continue to operate. If not, the inverter will shut down again.
The Search Mode “shut down” and “remain on” load levels can be set with VEConfigure.
The standard settings are:
Shut down: 40 Watt (linear load)
Turn on: 100 Watt (linear load)
Not adjustable with DIP switches. Applicable in stand-alone configuration only.

Ground relay (see appendix B)
With this relay (E) the neutral conductor of the AC output is grounded to the casing when the back feed safety relays in the AC-in-1 and the AC-in-2 inputs are open. This ensures the correct operation of earth leakage circuit breakers in the outputs.
- If a non-grounded output is required during inverter operation, this function must be turned off. (See also Section 4.5)
Not adjustable with DIP switches.
- If required an external ground relay can be connected (for a split-phase system with a separate autotransformer).
See appendix A.

Charging characteristics
The standard setting is “Four-stage adaptive with BatterySafe mode”. See Section 2 for a description.
This is the best charging characteristic. See the help files in the software configuration programs for other features.
“Fixed” mode can be selected with DIP switches.

Battery type
The standard setting is the most suitable for Victron Gel Deep Discharge, Gel Exide A200, and tubular plate stationary batteries (OPzS). This setting can also be used for many other batteries: e.g. Victron AGM Deep Discharge and other AGM batteries, and many types of flat-plate open batteries. Four charging voltages can be set with DIP switches.

Automatic equalisation charging
This setting is intended for tubular plate traction batteries. During absorption the voltage limit increases to 2,83 V/cell (34 V for a 24 V battery) once the charge current has tapered down to less than 10 % of the set maximum current.
Not adjustable with DIP switches.
See “tubular plate traction battery charge curve” in VEConfigure.

Absorption time
This depends on the bulk time (adaptive charging characteristic), so that the battery is optimally charged. If the “fixed” charging characteristic is selected, the absorption time is fixed. For most batteries, a maximum absorption time of eight hours is suitable. If an extra high absorption voltage is selected for rapid charging (only possible for open, flooded batteries!), four hours is preferable. With DIP switches, a time of eight or four hours can be set. For the adaptive charging characteristic, this determines the maximum absorption time.

Storage voltage, Repeated Absorption Time, Absorption Repeat Interval
See Section 2. Not adjustable with DIP switches.

Bulk Protection
When this setting is “on”, the bulk charging time is limited to 10 hours. A longer charging time could indicate a system error (e.g. a battery cell short-circuit). Not adjustable with DIP switches.

AC input current limit AC-in-1 (generator) and AC-in-2 (shore/grid supply)

Model	12/5000/220 24/5000/120 48/5000/120	24/8000/200 48/8000/110	48/10000/140	48/15000/200
PowerAssist setting range	4 A – 100 A	11 A – 100 A	11 A – 100 A	15 A – 100 A

Factory setting: 50 A for AC1 and 16 A for AC2.
In case of parallel units the minimum and maximum values have to be multiplied by the number of parallel units.

UPS feature
If this setting is “on” and AC on the input fails, the Quattro switches to inverter operation practically without interruption. The Quattro can then be used as an Uninterruptible Power Supply (UPS) for sensitive equipment such as computers or communication systems.
The output voltage of some small generating sets is too unstable and distorted for using this setting – the Quattro would continually switch to inverter operation. For this reason, the setting can be turned off. The Quattro will then respond less quickly to voltage deviations on AC-in-1 or AC-in-2. The switchover time to inverter operation is consequently slightly longer, but most equipment (computers, clocks or household equipment) is not adversely impacted.
Recommendation: Turn the UPS feature off if the Quattro fails to synchronise, or continually switches back to inverter operation.

Dynamic current limiter
Intended for generators, the AC voltage being generated by means of a static inverter (so-called “inverter” generators). In these generators, rotational speed is down-controlled if the load is low: this reduces noise, fuel consumption and pollution. A disadvantage is that the output voltage will drop severely or even completely fail in the event of a sudden load increase. More load can only be supplied after the engine is up to speed.
If this setting is “on”, the Quattro will start supplying extra power at a low generator output level and gradually allow the generator to supply more, until the set current limit is reached. This allows the generator engine to get up to speed.
This setting is also often used for “classical” generators that respond slowly to sudden load variation.

WeakAC
Strong distortion of the input voltage can result in the charger hardly operating or not operating at all. If WeakAC is set, the charger will also accept a strongly distorted voltage, at the cost of greater distortion of the input current.
Recommendation: Turn WeakAC on if the charger is hardly charging or not charging at all (which is quite rare!). Also turn on the dynamic current limiter simultaneously, and reduce the maximum charging current to prevent overloading the generator if necessary.
Note: when WeakAC is on, the maximum charge current is reduced by approximately 20 %.
Not adjustable with DIP switches.

BoostFactor
Change this setting only after consulting with Victron Energy or with an engineer trained by Victron Energy!
Not adjustable with DIP switches.

Three programmable relays
The Quattro is equipped with 3 programmable relays. The relays can be programmed for all kinds of other applications, for example as a starter relay for a generating set. The default setting of the relay in postion I (see appendix A, upper right corner) is “alarm”.
Not adjustable with DIP switches.

Two programmable analog/digital input/output ports
The Quattro is equipped with 2 analog/digital input/output ports.
These ports can be used for several purposes. One application is communication with the BMS of a lithium-ion battery.
Not adjustable with DIP switches.

Frequency shift
When solar inverters are connected to the output of a Multi or Quattro, the excess solar energy is used to recharge the batteries. Once the absorption voltage is reached, the Multi or Quattro will shut down the solar inverter by shifting the output frequency 1 Hz (from 50 Hz to 51 Hz for example). Once battery voltage has dropped slightly, the frequency returns to normal and the solar inverters will restart.
Not adjustable with DIP switches.

Built-in Battery Monitor (optional)
The ideal solution when Multi’s or Quattro’s are part of a hybrid system (diesel generator, inverter/chargers, storage battery, and alternative energy). The built-in battery monitor can be set to start and stop the generator:
- Start at a preset % discharge level, and/or
- start (with a preset delay) at a preset battery voltage, and/or
- start (with a preset delay) at a preset load level.
- Stop at a preset battery voltage, or
- stop (with a preset delay) after the bulk charge phase has been completed, and/or
- stop (with a preset delay) at a preset load level.

Not adjustable with DIP switches.

5.3 Configuration by computer

All settings can be changed by means of a computer
The most common settings can be changed by means of DIP switches (see Section 5.5).

NOTE:

This manual is intended for products with firmware xxxx400 or higher (with x any number)
The firmware number can be found on the microprocessor, after removing the front panel.
It is possible to update older units, as long as that same 7 digit number starts with either 26 or 27. When it starts with 19 or 20 you have an old microprocessor and it is not possible to update to 400 or higher.

For changing settings with the computer, the following is required:
- VEConfigureII software: can be downloaded free of charge at www.victronenergy.com.
- A RJ45 UTP cable and the MK3-USB interface.

5.3.1 VE.Bus Quick Configure Setup

VE.Bus Quick Configure Setup is a software program with which systems with a maximum of three Quattro units (parallel or three phase operation) can be configured in a simple manner. VEConfigureII forms part of this program.
The software can be downloaded free of charge at www.victronenergy.com .
For connection to the computer, a RJ45 UTP cable and the MK3-USB interface is required.

5.3.2 VE.Bus System Configurator

For configuring advanced applications and/or systems with four or more Quattro units, **VE.Bus System Configurator** software must be used. The software can be downloaded free of charge at www.victronenergy.com . VEConfigureII forms part of this program.
For connection to the computer, a RJ45 UTP cable and the MK3-USB interface is required.

5.4 Configuration with a VE.Net panel

To this end, a VE.Net panel and the VE.Net to VE.Bus converter is required.
With VE.Net all parameters are accessible, with the exception of the multi-functional relay and the VirtualSwitch.

5.5 Configuration with DIP switches

Introduction
A number of settings can be changed using DIP switches (see appendix A, position M).

Note: When changing settings with dipswitches in a parallel or split-phase/3-phase system one should be aware that not all settings are relevant on all Quattros. This because some settings will be dictated by the Master or Leader.
Some settings are only relevant in the Master/Leader (ie they are not relevant in a slave or in a follower). Other settings are not relevant for slaves but are relevant for followers.

A note on used terminology:
A system in which more than one Quattro *is used to create a single AC phase is called a parallel system. In this case one of the* Quattros *will control the whole phase, this one is called the master. The others, called slaves, will just listen to the master to determine their action.*

It is also possible to create more AC phases (split-phase or 3-phase) with 2 or 3 Quattros*. In this case the* Quattro *in Phase L1 is called the Leader. The* Quattro *in phase L2 (and L3 if available) will generate the same AC frequency but will follow L1 with a fixed phase shift. These* Quattros *are called followers.*

If more Quattros *are used per phase in a split-phase or 3-phase system (for instance 6* Quattros *used to build a 3-phase system with 2* Quattros *per phase) then the Leader of the system is also the Master of phase L1. The Followers in phase L2 and L3 will also take the Master role in phase L2 and L3. All others will be slaves.*

Setting up parallel or split-phase/3-phase systems should be done by software, see paragraph 5.3.

TIP: If you don't want to bother about a Quattro being a master/slave/follower then the easiest and most straight forward way is to set all settings identically on all Quattros.

General procedure:

Turn the Quattro on, preferably unloaded en without AC voltage on the inputs. The Quattro will then operate in inverter mode.

Step 1: Set the DIP switches for:
- the required current limitation of the AC input. (not relevant for slaves)
- limitation of the charging current. (only relevant for Master/Leader)

Press the 'Up' button for 2 seconds (**upper** button to the right of the DIP switches, see appendix A, position K) to store the settings after the required values have been set. You can now re-use the DIP switches to apply the remaining settings (step 2).

Step 2: other settings, set the dipswitches for:
- Charge voltages (only relevant for Master/Leader)
- Absorption time (only relevant for Master/Leader)
- Adaptive charging (only relevant for Master/Leader)
- Dynamic current limiter (not relevant for slaves)
- UPS function (not relevant for slaves)
- converter voltage (not relevant for slaves)
- converter frequency (only relevant for Master/Leader)

Press the "Down" button for 2 seconds (**lower** button to the right of the DIP switches) to store the settings after the dipswitches have been set in the correct position. You can now leave the DIP switches in the selected positions, so that the "other settings" can always be recovered.

Remark:
- The DIP switch functions are described in 'top to bottom' order. Since the uppermost DIP switch has the highest number (8), descriptions start with the switch numbered 8.

Detailed instruction:

5.5.1 Step 1
5.5.1.1 Current limitation AC inputs (default: AC-in-1: 50 A, AC-in-2: 16 A)
If the current demand (Quattro load + battery charger) threatens to exceed the set current, the Quattro will first reduce its charging current (PowerControl), and subsequently supply additional power from the battery (PowerAssist), if needed.

The AC-in-1 current limit (the generator) can be set to eight different values by means of DIP switches.
The AC-in-2 current limit can be set to two different values by means of DIP switches. With a Multi Control Panel, a variable current limit can be set for the AC-in-2 input.

Procedure
AC-in-1 can be set using DIP switches ds8, ds7 and ds6 (default setting: 50A).
Procedure: set the DIP switches to the required value:

ds8	ds7	ds6
off	off	off = 6,3 A (PowerAssist 11 A, PowerControl 6 A)
off	off	on = 10 A (PowerAssist 11 A, PowerControl 10 A)
off	on	off = 12 A (2.8 kVA at 230 V)
off	on	on = 16 A (3.7 kVA at 230 V)
on	off	off = 20 A (4.6 kVA at 230 V)
on	off	on = 25 A (5,7 kVA at 230 V)
on	on	off = 30 A (6,9 kVA at 230 V)
on	on	on = 50 A (11,5 kVA at 230 V)

More than 50 A: with VEConfigure software

Remark: Manufacturer-specified continuous power ratings for small generators are sometimes inclined to be rather optimistic. In that case, the current limit should be set to a much lower value than would otherwise be required on the basis of manufacturer-specified data.

AC-in-2 can be set in two steps using DIP switch ds5 (default setting: 16 A).
Procedure: set ds5 to the required value:

ds5
off = 16 A
on = 30 A
More than 30 A: with VEConfigure software or Digital Multi Control Panel

5.5.1.2 Charge current limitation (default setting 75 %)
For maximum battery life, a charge current of 10 % to 20 % of the capacity in Ah should be applied.
Example: optimal charge current of a 24 V/500 Ah battery bank: 50 A to 100 A.
The temperature sensor supplied automatically adjusts the charging voltage to the battery temperature.
If faster charging – and a subsequent higher current – is required:
- the temperature sensor supplied should be fitted to the battery, since fast charging can lead to a considerable temperature rise of the battery bank. The charging voltage is adapted to the higher temperature (i.e. lowered) by means of the temperature sensor.
- the bulk charging time will sometimes be so short that a fixed absorption time would be more satisfactory (“fixed” absorption time, see ds5, step 2).

Procedure
The battery charging current can be set in four steps, using DIP switches ds4 and ds3 (default setting: 75 %).

ds4	ds3
off	off = 25 %
off	on = 50 %
on	off = 75 %
on	on = 100 %

Note: when WeakAC is on, the maximum charge current is reduced from 100 % to approximately 80 %.

5.5.1.3 DIP switches ds2 and ds1 are not used during step 1.

IMPORTANT NOTE:
If the last 3 digits of the Multi firmware is in the 100 range (so the firmware number is xxxx1xx (with x any numer)) then ds1 & ds2 are used to set a Multi in stand-alone, parallel or three-phase. Please consult the appropriate manual.

5.5.1.4 Examples

examples of settings:

DS-8 AC-in-1 on DS-7 AC-in-1 on DS-6 AC-in-1 on DS-5 AC-in-2 on DS-4 Charging current on DS-3 Charging current off DS-2 Stand-alone mode off DS-1 Stand-alone mode off	DS-8 on DS-7 on DS-6 on DS-5 off DS-4 on DS-3 on DS-2 off DS-1 off	DS-8 off DS-7 on DS-6 on DS-5 off DS-4 on DS-3 on DS-2 off DS-1 off	DS-8 on DS-7 on DS-6 off DS-5 on DS-4 off DS-3 on DS-2 off DS-1 off
Step1, stand-alone **Example 1 (factory setting):** 8, 7, 6 AC-in-1: 50 A 5 AC-in-2: 30 A 4, 3 Charging current: 75 % 2, 1 Stand-alone mode	**Step1, stand-alone** **Example 2:** 8, 7, 6 AC-in-1: 50 A 5 AC-in-2: 16 A 4, 3 Charge: 100 % 2, 1 Stand-alone	**Step1, stand-alone** **Example 3:** 8, 7, 6 AC-in-1: 16 A 5 AC-in-2: 16 A 4, 3 Charge: 100 % 2, 1 Stand-alone	**Step1, stand-alone** **Example 4:** 8, 7, 6 AC-in-1: 30 A 5 AC-in-2: 30 A 4, 3 Charge: 50 % 2, 1 Stand-alone

To store the settings after the required values have been set: press the “Up” button for 2 seconds (**upper** button to the right of the DIP switches, see appendix A, position K). **The overload and low-battery LED’s will flash to indicate acceptance of the settings.**
We recommend making a note of the settings, and filing this information in a safe place.

The DIP switches can now be used to apply the remaining settings (step 2).

5.5.2 Step 2: Other settings

The remaining settings are not relevant for slaves.
Some of the remaining settings are not relevant for followers **(L2, L3)**. These settings are imposed on the whole system by the leader **L1**. If a setting is irrelevant for L2, L3 devices, this is mentioned explicitly.

ds8-ds7: Setting charging voltages **(not relevant for L2, L3)**

ds8-ds7	Absorption voltage	Float voltage	Storage voltage	Suitable for
off off	14.1 28.2 56.4	13.8 27.6 55.2	13.2 26.4 52.8	Gel Victron Long Life (OPzV) Gel Exide A600 (OPzV) Gel MK battery
off on	14.4 28.8 57.6	13.8 27.6 55.2	13.2 26.4 52.8	Gel Victron Deep Discharge Gel Exide A200 AGM Victron Deep Discharge Stationary tubular plate (OPzS)
on off	14.7 29.4 58.8	13.8 27.6 55.2	13.2 26.4 52.8	AGM Victron Deep Discharge Tubular plate (OPzS) batteries in semi-float mode AGM spiral cell
on on	15.0 30.0 60.0	13.8 27.6 55.2	13.2 26.4 52.8	Tubular plate (OPzS) batteries in cyclic mode

ds6: absorption time 8 or 4 hours **(not relevant for L2, L3)**	on = 8 hours	off = 4 hours
ds5: adaptive charging characteristic **(not relevant for L2, L3)**	on = active	off = inactive (fixed absorption time)
ds4: dynamic current limiter	on = active	off = inactive
ds3: UPS function	on = active	off = inactive
ds2: converter voltage	on = 230 V / 120 V	off = 240 V / 115 V
ds1: converter frequency **(not relevant for L2, L3)** (the wide input frequency range (45-55 Hz) is 'on' by default)	on = 50 Hz	off = 60 Hz

Note:

- If “adaptive charging algorithm” is on, ds6 sets the maximum absorption time to 8 hours or 4 hours.
- If “adaptive charging algorithm” is off, the absorption time is set to 8 hours or 4 hours (fixed) by ds6.

Step 2: Exemplary settings
Example 1 is the factory setting (since factory settings are entered by computer, all DIP switches of a new product are set to “off” and do not reflect the actual settings in the microprocessor).

DS-8 Ch. voltage: off DS-7 Ch. voltage: on DS-6 Absorpt. time: on DS-5 Adaptive ch.: on DS-4 Dyn. Curr. limit: off DS-3 UPS function: on DS-2 Voltage: on DS-1 Frequency: on	DS-8: off DS-7: off DS-6: on DS-5: on DS-4: off DS-3: off DS-2: on DS-1: on	DS-8: on DS-7: off DS-6: on DS-5: on DS-4: on DS-3: off DS-2: off DS-1: on	DS-8: on DS-7: on DS-6: off DS-5: off DS-4: off DS-3: on DS-2: off DS-1: off
Step 2 **Example 1 (factory setting):** 8, 7 GEL 14,4 V 6 Absorption time: 8 hours 5 Adaptive charging: on 4 Dynamic current limit: off 3 UPS function: on 2 Voltage: 230 V 1 Frequency: 50 Hz	**Step 2** **Example 2:** 8, 7 OPzV 14,1 V 6 Absorption time: 8 h 5 Adaptive charging: on 4 Dyn. current limit: off 3 UPS function: off 2 Voltage: 230 V 1 Frequency: 50 Hz	**Step 2** **Example 3:** 8, 7 AGM 14,7 V 6 Absorption time: 8 h 5 Adaptive charging: on 4 Dyn. current limit: on 3 UPS function: off 2 Voltage: 240 V 1 Frequency: 50 Hz	**Step 2** **Example 4:** 8, 7 Tubular-plate 15 V 6 Absorption time: 4 h 5 Fixed absorption time 4 Dyn. current limit: off 3 UPS function: on 2 Voltage: 240 V 1 Frequency: 60 Hz

To store the settings after the required values have been set: press the 'Down' button for 2 seconds (lower button to the right of the DIP switches). **The temperature and low-battery LEDs will flash to indicate acceptance of the settings.**

The DIP switches can be left in the selected positions, so that the “other settings” can always be recovered.

6. MAINTENANCE

The Quattro does not require specific maintenance. It will suffice to check all connections once a year. Avoid moisture and oil/soot/vapours, and keep the device clean.

7. ERROR INDICATIONS

With the procedures below, most errors can be quickly identified. If an error cannot be resolved, please refer to your Victron Energy supplier.

7.1 General error indications

Problem	Cause	Solution
Quattro will not switch over to generator or mains operation.	Circuit breaker or fuse in the AC-in input is open as a result of overload.	Remove overload or short circuit on AC-out-1 or AC-out-2, and reset fuse/breaker.
Inverter operation not initiated when switched on.	The battery voltage is excessively high or too low. No voltage on DC connection.	Ensure that the battery voltage is within the correct range.
“Low battery” LED flashes.	The battery voltage is low.	Charge the battery or check the battery connections.
“Low battery” LED lights.	The converter switches off because the battery voltage is too low.	Charge the battery or check the battery connections.
“Overload” LED flashes.	The converter load is higher than the nominal load.	Reduce the load.
“Overload” LED lights.	The converter is switched off due to excessively high load.	Reduce the load.
“Temperature” LED flashes or lights.	The environmental temperature is high, or the load is too high.	Install the converter in cool and well-ventilated environment, or reduce the load.
“Low battery” and “overload” LEDs flash intermittently.	Low battery voltage and excessively high load.	Charge the batteries, disconnect or reduce the load, or install higher capacity batteries. Fit shorter and/or thicker battery cables.
“Low battery” and “overload” LEDs flash simultaneously.	Ripple voltage on the DC connection exceeds 1,5Vrms.	Check the battery cables and battery connections. Check whether battery capacity is sufficiently high, and increase this if necessary.
“Low battery” and “overload” LEDs light.	The inverter is switched off due to an excessively high ripple voltage on the input.	Install batteries with a larger capacity. Fit shorter and/or thicker battery cables, and reset the inverter (switch off, and then on again).
One alarm LED lights and the second flashes.	The inverter is switched off due to alarm activation by the lighted LED. The flashing LED indicates that the inverter was about to switch off due to the related alarm.	Check this table for appropriate measures in regard to this alarm state.
The charger does not operate.	The AC input voltage or frequency is not within the range set.	Ensure that the AC input is between 185 VAC and 265 VAC, and that the frequency is within the range set (default setting 45-65 Hz).
	Circuit breaker or fuse in the AC-in input is open as a result of overload.	Remove overload or short circuit on AC-out-1 or AC-out-2, and reset fuse/breaker.
	The battery fuse has blown.	Replace the battery fuse.
	The distortion or the AC input voltage is too large (generally generator supply).	Turn the settings WeakAC and dynamic current limiter on.
The charger does not operate. “Bulk” LED flashes and “Mains on” LED illuminates.	MultiPlus is in “Bulk protection” mode thus, the maximum bulk charging time of 10 hours is exceeded. Such a long charging time could indicate a system error (e.g. a battery cell short-circuit).	Check your batteries. **NOTE:** You can reset the error mode by switching off and back on the MultiPlus. The standard Quattro factory setting of the “Bulk protection” mode is switched on. The “Bulk protection” mode can be switched off with help of VEConfigure only.
The battery is not completely charged.	Charging current excessively high, causing premature absorption phase.	Set the charging current to a level between 0.1 and 0.2 times the battery capacity.
	Poor battery connection.	Check the battery connections.
	The absorption voltage has been set to an incorrect level (too low).	Set the absorption voltage to the correct level.
	The float voltage has been set to an incorrect level (too low).	Set the float voltage to the correct level.
	The available charging time is too short to fully charge the battery.	Select a longer charging time or higher charging current.
	The absorption time is too short. For adaptive charging this can be caused by an extremely high charging current with respect to battery capacity, so that bulk time is insufficient.	Reduce the charging current or select the “fixed” charging characteristics.
The battery is overcharged.	The absorption voltage is set to an incorrect level (too high).	Set the absorption voltage to the correct level.
	The float voltage is set to an incorrect level (too high).	Set the float voltage to the correct level.
	Poor battery condition.	Replace the battery.
	The battery temperature is too high (due to poor ventilation, excessively high environmental temperature, or excessively high charging current).	Improve ventilation, install batteries in a cooler environment, reduce the charging current, **and connect the temperature sensor**.
The charging current drops to 0 as soon as the absorption phase initiates.	The battery is over-heated (>50 °C)	Install the battery in a cooler environment Reduce the charging current Check whether one of the battery cells has an internal short circuit
	Defective battery temperature sensor	Disconnect the temperature sensor plug in the Quattro. If charging functions correctly after approximately 1 minute, the temperature sensor should be replaced.

7.2 Special LED indications

(for the normal LED indications, see section 3.4)

Bulk and absorption LEDs flash synchronously (simultaneously).	Voltage sense error. The voltage measured at the voltage sense connection deviates too much (more than 7V) from the voltage on the positive and negative connection of the device. There is probably a connection error. The device will remain in normal operation. NOTE: If the “inverter on” LED flashes in phase opposition, this is a VE.Bus error code (see further on).
Absorption and float LEDs flash synchronously (simultaneously).	The battery temperature as measured has an extremely unlikely value. The sensor is probably defective or has been incorrectly connected. The device will remain in normal operation. NOTE: If the “inverter on” LED flashes in phase opposition, this a VE.Bus error code (see further on).
“Mains on” flashes and there is no output voltage.	The device is in “charger only” operation and mains supply is present. The device rejects the mains supply or is still synchronising.

7.3 VE.Bus LED indications

Equipment included in a VE.Bus system (a parallel or 3-phase arrangement) can provide so-called VE.Bus LED indications. These LED indications can be subdivided into two groups: OK codes and error codes.

7.3.1 VE.Bus OK codes

If the internal status of a device is in order but the device cannot yet be started because one or more other devices in the system indicate an error status, the devices that are in order will indicate an OK code. This facilitates error tracing in a VE.Bus system, since devices not requiring attention are easily identified as such.

Important: OK codes will only be displayed if a device is not in inverter or charging operation!

- A flashing “bulk” LED indicates that the device can perform inverter operation.
- A flashing “float” LED indicates that the device can perform charging operation.

NOTE: In principle, all other LEDs must be off. If this is not the case, the code is not an OK code.
However, the following exceptions apply:

- The special LED indications above can occur together with the OK codes.
- The “low battery” LED can function together with the OK code that indicates that the device can charge.

7.3.2 VE.Bus error codes

A VE.Bus system can display various error codes. These codes are displayed with the “inverter on”, “bulk”, “absorption” and “float” LEDs.

To interpret a VE.Bus error code correctly, the following procedure should be followed:
1. The device should be in error (no AC output).
2. Is the “inverter on” LED flashing? If not, then there is **no** VE.Bus error code.
3. If one or more of the LEDs “bulk”, “absorption” or “float” flashes, then this flash must be in phase opposition to the “inverter on” LED, i.e. the flashing LEDs are off if the “inverter on” LED is on, and vice versa. If this is not the case, then there is **no** VE.Bus error code.
4. Check the “bulk” LED, and determine which of the three tables below should be used.
5. Select the correct column and row (depending on the “absorption” and “float” LEDs), and determine the error code.
6. Determine the meaning of the code in the tables below.

		Bulk LED off			Bulk LED flashes			Bulk LED on		
		Absorption LED			Absorption LED			Absorption LED		
		off	flashing	On	off	flashing	on	off	flashing	on
Float LED	off	0	3	6	9	12	15	18	21	24
	flashing	1	4	7	10	13	16	19	22	25
	on	2	5	8	11	14	17	20	23	26

Bulk LED Absorption LED Float LED	Code	Meaning:	Cause/solution:
○ ○ ✳	1	Device is switched off because one of the other phases in the system has switched off.	Check the failing phase.
○ ✳ ○	3	Not all, or more than, the expected devices were found in the system.	The system is not properly configured. Reconfigure the system. Communication cable error. Check the cables and switch all equipment off, and then on again.
○ ✳ ✳	4	No other device whatsoever detected.	Check the communication cables.
○ ✳ ●	5	Overvoltage on AC-out.	Check the AC cables.
✳ ○ ✳	10	System time synchronisation problem occurred.	Should not occur in correctly installed equipment. Check the communication cables.
✳ ✳ ●	14	Device cannot transmit data.	Check the communication cables (there may be a short circuit).
✳ ● ●	17	One of the devices has assumed “master” status because the original master failed.	Check the failing unit. Check the communication cables.
● ○ ○	18	Overvoltage has occurred.	Check AC cables.
● ✳ ✳	22	This device cannot function as “slave”.	This device is an obsolete and unsuitable model. It should be replaced.
● ● ○	24	Switch-over system protection initiated.	Should not occur in correctly installed equipment. Switch all equipment off, and then on again. If the problem recurs, check the installation. **Possible solution: increase lower limit of AC input voltage to 210 VAC (factory setting is 180 VAC)**
● ● ✳	25	Firmware incompatibility. The firmware of one the connected devices is not sufficiently up to date to operate in conjunction with this device.	1) Switch all equipment off. 2) Switch the device returning this error message on. 3) Switch on all other devices one by one until the error message reoccurs. 4) Update the firmware in the last device that was switched on.
● ● ●	26	Internal error.	Should not occur. Switch all equipment off, and then on again. Contact Victron Energy if the problem persists.

8. TECHNICAL SPECIFICATION

Quattro	12/5000/220-100/100 24/5000/120-100/100 48/5000/70-100/100	24/8000/200-100/100 48/8000/110-100/100	48/10000/140-100/100	48/15000/200-100/100
Nominal Battery Voltage	12/5000: 12V Battery 24/5000: 24V Battery 48/5000: 48V Battery	24/8000: 24V Battery 48/8000: 48V Battery	48V Battery	
PowerControl / PowerAssist	Yes			
Integrated Transfer switch	Yes			
AC inputs (2x)	Input voltage range: 187-250 VAC Input frequency: 50/60 Hz Cos Φ >0.8			
Maximum feed through current (A)	2x100	2x100	2x100	2x100
ICw	10 kA			
I short circuit	2.2 kA Peak 1.6 kA rms			
INVERTER				
Input voltage range (VDC)	9,5 – 17 V 19 – 33 V 38 – 66 V			
Output (1)	Output voltage: 230 VAC ± 2 % Frequency: 50 Hz ± 0,1 %			
Cont. output power at 25 °C (VA) (3)	5000	8000	10000	15000
Cont. output power at 25 °C (W)	4000	6400	8000	12000
Cont. output power at 40 °C (W)	3700	5500	6500	10000
Cont. output power at 65 °C (W)	3000	3600	4500	7000
Peak power (W)	10000	16000	20000	25000
Input Current (A DC)	458/238/118	381/188	235	350
Max. continous output current (A)	19	30	37	53/50
Power factor range	±0.8	±0.8	±0.8	±0.8
Maximum output fault current	53A 1sec.	100A 1sec	100A 1sec	150A 1sec
Maximum efficiency (%)	94 / 94 / 95	94 / 96	96	96
Zero load power (W)	30 / 30 / 35	45 / 50	55	80
Zero load power in AES mode (W)	20 / 25 / 30	30 / 30	35	50
Zero load power in Search mode (W)	10 / 10 / 15	10 / 20	20	30
CHARGER				
Charge voltage "absorption" (VDC)	14,4 / 28,8 / 57,6	28,8 / 57,6	57,6	57,6
Charge voltage "float" (VDC)	13,8 / 27,6 / 55,2	27,6 / 55,2	55,2	55,2
Storage mode (VDC)	13,2 / 26,4 / 52,8	26,4 / 52,8	52,8	52,8
Charge current house battery (A) (4)	220 / 120 / 70	200 / 110	140	200
Charge current starter battery (A)	4 (12 V and 24 V models only)			
Battery temperature sensor	Yes			
GENERAL				
Auxiliary output (A) (5)	50	50	50	50
Programmable relay (6)	3x	3x	3x	3x
Protection (2)	a-g			
VE.Bus communication port	For parallel and three phase operation, remote monitoring and system integration			
General purpose com. port	2x	2x	2x	2x
Remote on-off	Yes			
Common Characteristics	Operating temp.: -20 to +60 ˚C Humidity (non-condensing): max. 95 %			
Maximum altitude	2000 m			
ENCLOSURE				
Common Characteristics	Material & Colour: aluminium (blue RAL 5012), Protection category: IP20, pollution degree 2, OVCIII			
Battery-connection	Four M8 bolts (2 plus and 2 minus connections)			
230 VAC-connection	Bolts M6	Bolts M6	Bolts M6	Bolts M6
Weight (kg)	34 / 30 / 30	45 / 41	45	72
Dimensions (hxwxd in mm)	470 x 350 x 280 444 x 328 x 240 444 x 328 x 240	470 x 350 x 280	470 x 350 x 280	572 x 488 x 344
STANDARDS				
Safety	EN-IEC 60335-1, EN-IEC 60335-2-29, EN-IEC 62109-1			
Emission, Immunity	EN 55014-1, EN 55014-2, EN-IEC 61000-3-2, EN-IEC 61000-3-3, EN-IEC 61000-6-3, EN-IEC 61000-6-2, EN-IEC 61000-6-1			
Vehicles, aftermarket	12 V and 24 V models: EN 50498			
Anti-islanding	See our website			
1) Can be adjusted to 60 HZ; 120 V 60 Hz on request 2) Protection key: a) output short circuit b) overload c) battery voltage too high d) battery voltage too low e) temperature too high f) 230 VAC on inverter output g) input voltage ripple too high	3) Non-linear load, crest factor 3:1 4) At 25 ˚C ambient 5) Switches off when no external AC source available 6) Programmable relay that can a.o. be set for general alarm, DC under voltage or genset start/stop function AC rating: 230 V / 4 A DC rating: 4 A up to 35 VDC, 1 A up to 60 VDC			

APPENDIX A: Overview connections
BIJLAGE A: Overzicht aansluitingen
ANNEXE A : Vue d'ensemble des connections
ANHANG A: Übersicht Anschlüsse
APÉNDICE A: Conexiones generales
APPENDIX A: Översikt kontakter
APPENDICE A: Panoramica connessioni

5-10 KVA model

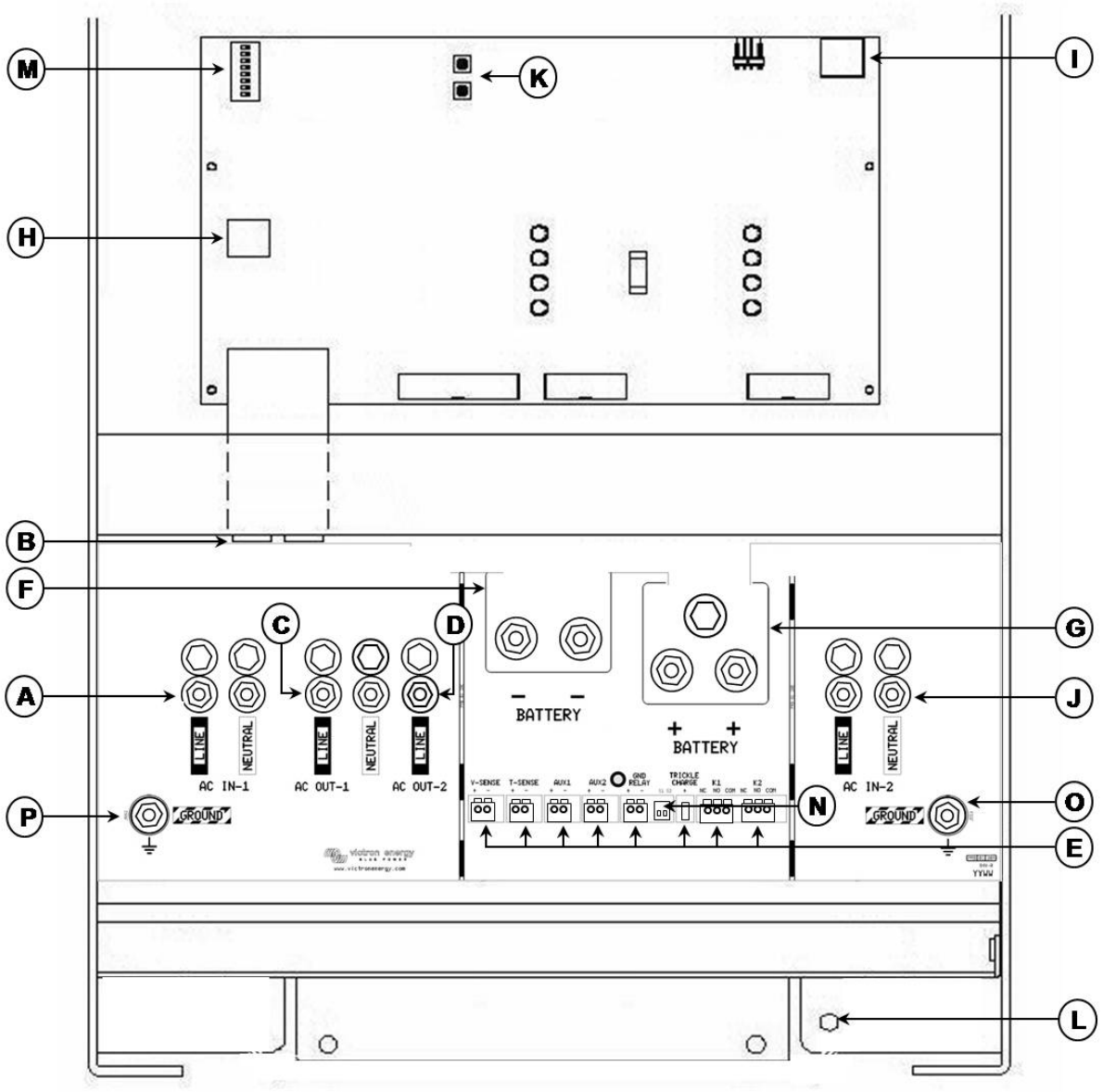

15 KVA model

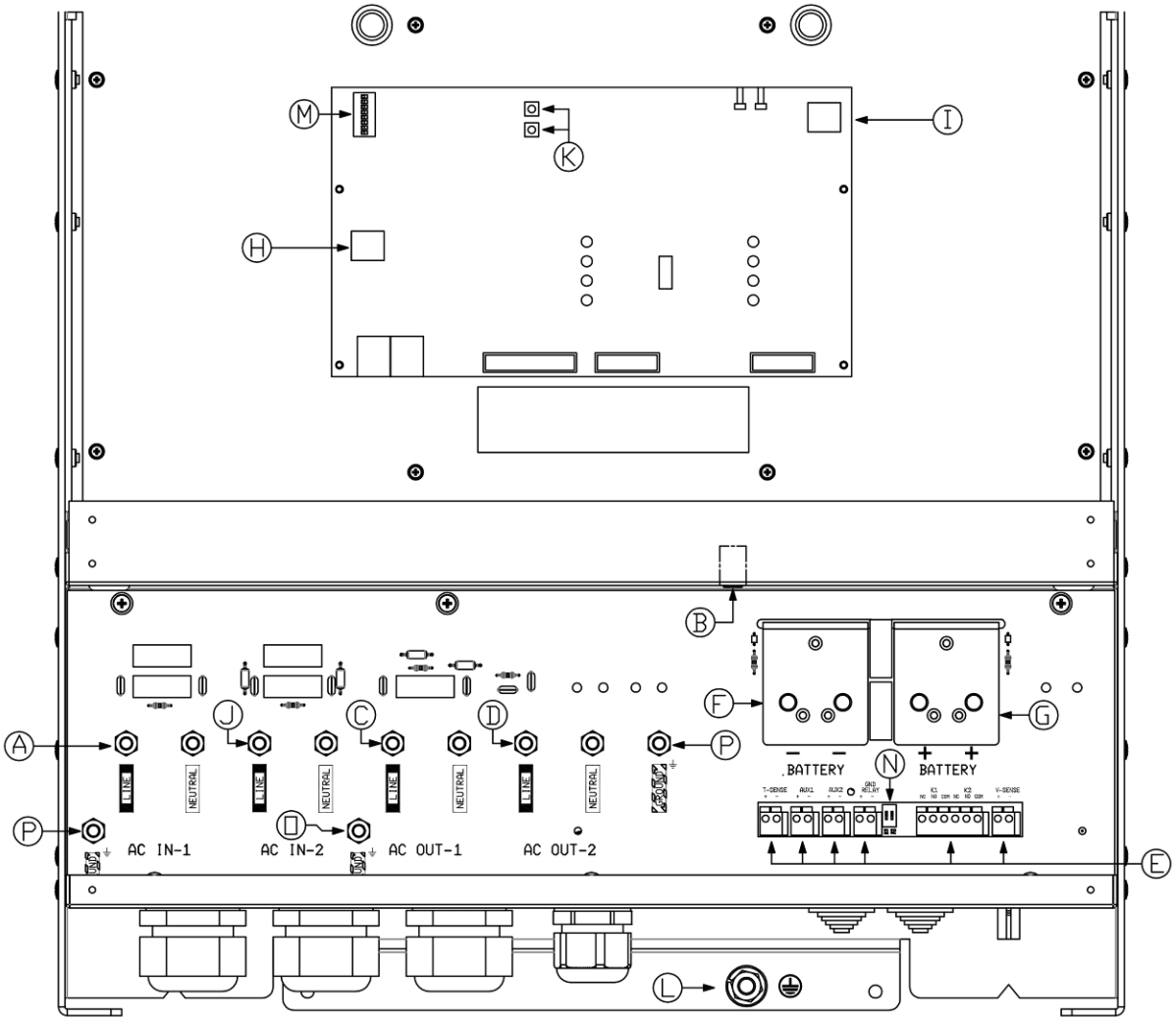
M
I
K
H
B
F
G
A
J
C
D
P
N
E
L
BATTERY
BATTERY
LINE
NEUTRAL
AC IN-1
AC IN-2
AC OUT-1
AC OUT-2

APPENDIX A: Overview connections
BIJLAGE A: Overzicht aansluitingen
ANNEXE A : Vue d'ensemble des connections
ANHANG A: Übersicht Anschlüsse
APÉNDICE A: Conexiones generales
APPENDIX A: Översikt kontakter
APPENDICE A: Panoramica connessioni

EN:

A	AC input M6 (generator input) AC IN-1. Left to right: L (phase), N (neutral).
B	2x RJ45 connector for remote panel and/or parallel and 3-phase operation.
C	AC output M6 AC OUT-1. Left to right: L (phase), N (neutral).
D	AC output M6 AC OUT-2. Left to right: N (neutral), L (phase).
E	Terminals for: (left to right) Voltage sense Temperature sensor Aux input 1 Aux input 2 GND-relay Starter battery plus + (starter battery minus must be connected to service battery minus) Programmable relay contacts K1 Programmable relay contacts K2
F	Double M8 battery minus connection.
G	Double M8 battery positive connection.
H	Connector for remote switch: Short left and middle terminal to switch "on". Short right and middle terminal to switch to "charger only".
I	Alarm contact: Left to right: NC, NO, COM.
J	AC input M6 (shore/grid supply) AC IN-2. Left to right: L (phase), N (neutral).
K	Push buttons for set-up mode
L	Primary ground connection M8 (PE).
M	DIP switches for set-up mode.
N	Slide switches, factory setting SW1= off position, SW2 = off position. SW1: Off = internal GND relay selected, On = external GND relay selected (to connect ext GND relay: see E). SW2: No application. To be used for future features.
O	AC IN-2 M6 common earth connection (ground).
P	AC IN-1 and AC OUT-1 M6 earth connection (ground).

NL:

A	Wisselspanning ingang M6 (generator) AC IN-1. Van links naar rechts: L (fase), N (nul).
B	2x RJ45 connector voor afstandsbedieningspaneel en/of parallel and 3-fase bedrijf.
C	Wisselspanning uitgang M6 AC OUT-1. Van links naar rechts: L (fase), N (nul).
D	Wisselspanning uitgang M6 AC OUT-2. Van links naar rechts: N (nul),L (fase).
E	Aansluitklemmen voor: (van links naar rechts) Voltage sense Temperature sensor Aux ingang 1 Aux ingang 2 GND-relais Start accu plus + *(de min van start accu moet vebonden zijn met de min van de service accu)* Relais contacten K1 Relais contacten K2
F	Dubbele M8 accu min aansluiting.
G	Dubbele M8 accu plus aansluiting.
H	Aansluitklemmen voor afstandbedieningsschakelaar. Verbind de linker klem en de middelste klem om de Quattro aan te schakelen. Verbind de rechter klem en de middelste klem voor "alleen laden'.
I	Alarm contact: Van links naar rechts: NC, NO, COM.
J	Wisselspanning ingang M6 (walstroom/netspanning) AC IN-2. Van links naar rechts: L (fase), N (nul).
K	Drukknoppen om de instellingen in het micropressor geheugen op te slaan.
L	Primaire aarde M8.
M	Instel DIP switches.
N	Schuifschakelaars, fabrieksinstelling: SW1= onderste stand (uit), SW2 = onderste stand (uit) SW1: Uit = intern GND-relais geselecteerd, Aan = extern GND-relais geselecteeerd (extern aardrelais aan te sluiten via klemmen, zie E). SW2: Niet in gebruik. Toepasbaar in de toekomst.
O	Aarde aansluiting M6 voor AC IN-2.
P	Aarde aansluiting M6 voor zowel AC IN-1 en AC OUT-1

FR:

A	AC entrée M6 (entrée générateur) AC IN-1. De gauche à droite : L (phase), N (neutre).
B	2 connecteurs RJ45 pour tableau de commande et/ou fonctionnement en parallèle / triphasé.
C	Sortie CA M6 AC-OUT-1. De gauche à droite : L (phase), N (neutre).
D	Sortie CA M6 AC-OUT-2. De gauche à droite : N (neutre), L (phase).
E	Bornes pour: (de gauche à droite) Sonde de tension Sonde de température Entrée aux. 1 Entrée aux. 2 Relais de terre Pôle positif de la batterie de démarrage + (le pôle négatif de la batterie de démarrage doit être connecté au pôle négatif de la batterie de secours) Contacts relais programmables K1 Contacts relais programmables K2
F	Raccordement négatif de la batterie avec double écrou M8.
G	Double connexion positive de batterie M8.
H	Connecteur pour le contacteur à distance : Connecter borne gauche et centrale pour mise en marche. Connecter borne droite et centrale pour passer a « charger only ».
I	Contact alarme : De gauche à droite : NC, NO, COM.
J	Entrée CA M6 (alimentation réseau/quai) AC IN-2. De gauche à droite : L (phase), N (neutre).
K	Boutons-poussoirs pour le mode Configuration.
L	Connexion primaire à la terre M8 (PE)
M	Interrupteurs DIP. Mode paramétrage.
N	Interrupteurs à glissière, configuration d'usine SW1 = position off, SW2 = position off. SW1 : Off = relais de terre interne sélectionné, On = relais de terre externe sélectionné (pour connecter un relais de terre, consulter Annexe E). SW2 : Pas d'application. À utiliser pour de futures fonctions.
O	AC-in-2 M6 prise de terre (terre).
P	AC IN-1 et AC OUT-1 M6 Connexion à la terre (terre).

DE:

A	AC Eingang M6 (Generatoreingang) AC IN-1. Von links nach rechts: L (Phase), N (Nullleiter).
B	2x RJ45-Stecker für das Fernbedienungspaneel und/oder Parallel- und 3-Phasenbetrieb.
C	AC Ausgang M6 AC OUT-1. Von links nach rechts: L (Phase), N (Nullleiter).
D	AC Ausgang M6 AC OUT-2. Von links nach rechts: N (Nulleiter), L (Phase).
E	Anschlüsse für: (von links nach rechts) Spannungsmessung Temperatur-Fühler Aux input 1 Aux input 2 Erdungsrelais Starter-Batterie-Pluspol + (Starterbatterie-Minuspol muss an den Minuspol der Service-Batterie angeschlossen sein) Programmierbare Relais-Kontakte K1 Programmierbare Relais-Kontakte K2
F	Doppelter M8 Minusanschluss der Batterie.
G	Doppelter M8 Plusanschluss der Batterie.
H	Stecker für Fernbedienungsschalter: Kurze linke und mittlere Anschlussklemme, um auf "ON" (EIN) zu schalten. Kurze rechte und mittlere Anschlussklemme, um auf "charger only" (nur Ladegerät) zu schalten
I	Alarm-Kontakt: Von links nach rechts: NC, NO, COM.
J	AC Eingang M6 (Landstrom-/Netz-Versorgung) AC IN-2. Von links nach rechts: L (Phase), N (Nullleiter).
K	Tasten drücken für Set-up-Modus
L	Primärer Erdungsanschluss M8 (PE).
M	DIP-Schalter für den Einstellungsmodus.
N	Schiebeschalter, werksseitige Einstellung SW1 = off Position, SW2 = off Position. SW1: Off = internes Erdungsrelais ausgewählt, On = externes Erdungsrelais ausgewählt (um ein externes Erdungsrelais anzuschließen: siehe E). SW2: Keine Funktion Für künftige Funktionalitäten ausgelegt.
O	AC IN-2 M6 gemeinsame Erdung (Erde).
P	AC IN-1 und AC OUT-1 M6 Erdung (Erde).

ES:

A	Entrada CA M6 (entrada del generador) AC-in-1. Izquierda a derecha: L (fase), N (neutro).
B	2 conectores RJ45 para panel remoto y/o funcionamiento en paralelo o trifásico.
C	Salida CA M6 AC-out-1. Izquierda a derecha: L (fase), N (neutro).
D	Salida CA M6 AC-out-2. Izquierda a derecha: N (neutro), L (fase).
E	Terminales para: (izquierda a derecha) Sensor de tensión Sensor de temperatura Entrada auxiliar 1 Entrada auxiliar 2 Relé GND (tierra) Positivo de la batería de arranque + (el negativo de la batería de arranque debe conectarse al negativo de la batería de servicio) Contactos del relé programable K1. Contactos del relé programable K2.
L	Conexión del negativo de la batería por medio de M8 doble.
G	Conexión positivo batería M8 doble.
H	Conector para conmutador remoto: Terminal izquierdo corto y medio para “encender”. Terminal derecho corto y medio para conmutar a “charger only”.
I	Contacto de la alarma: Izquierda a derecha: NC, NO, COM.
J	Entrada CA M6 (suministro pantalán/red) AC-in-2. Izquierda a derecha: L (fase), N (neutro).
K	Pulsadores para modo configuración
L	Conexión a tierra primaria M8 (PE).
M	Conmutadores DIP para modo de configuración.
N	Potenciómetros, ajuste de fábrica SW1 = posición off, SW2 = posición off. SW1: Off = internal GND relay selected, On = external GND relay selected (to connect ext GND relay: see E). SW2: Sin función. Para su uso en funciones futuras.
O	Conexión a tierra común M6 (tierra) para AC IN-2.
P	Conexión a tierra M6 (tierra) para AC-IN-1 y AC-OUT-1.

SE:

A	AC-ingång M6 (generatoringång) AC IN-1. Vänster till höger: L (fas), N (neutral).
B	2x RJ45-anslutningsdon för fjärrkontroll och/eller parallell- / trefasdrift
C	AC-utmatning M6 AC OUT-1. Vänster till höger: L (fas), N (neutral).
D	AC-utgång M6 AC OUT-2. Vänster till höger: N (neutral), L (fas).
E	Poler för: (vänster till höger) Spänningssensor Temperatursensor Extra ingång 1 Extra ingång 2 GND-relä Startbatteri pluspol + (startbatteriets minuspol måste kopplas till servicebatteriets minuspol) Programmerbart relä kontakt K1 Programmerbart relä kontakt K2
F	Dubbelt M8 batteri minusanslutning.
G	Dubbelt M8 batteri plusanslutning.
H	Anslutningsdon för fjärrswitch: Kortslut den vänstra och mittersta polen för att växla till “på” Kortslut den högra och mittersta polen för att växla till “endast laddning”.
I	Larmkontakt: Vänster till höger: NC, NO, COM.
J	AC-ingång M6 (land/nätleverans) AC IN-2. Vänster till höger: L (fas), N (neutral).
K	Tryckknappar för inställningsläge
L	Primär jordanslutning M8 (PE).
M	DIP-switchar för inställningsläge.
N	Glidkontaktdon, fabriksinställning SW1= off position, SW2 = off position. SW1: Off = internt GND-relä valt, On = externt GND-relä valt (för att ansluta ext. GND-relä: se E). SW2: Ej tillämplig. Att användas för framtida funktioner.
O	AC IN-2 M6 allmän jordanslutning.
P	M6 jordanslutning för AC IN-1, AC OUT-1 och AC OUT-1.

IT:

A	Ingresso in CA M6 (ingresso generatore) AC IN-1. Da sinistra a destra: L (fase), N (neutro).
B	2 x connettore RJ45 per parallelo remoto e/o funzionamento in parallelo e trifase.
C	Uscita in CA M6 AC OUT-1. Da sinistra a destra: L (fase), N (neutro).
D	Uscita in CA M6 AC OUT-2. Da sinistra a destra: N (neutro), L (fase).
E	Connessioni per: (da sinistra a destra) Rilevamento della tensione Sensore temperatura Ingresso aux 1 Ingresso aux 2 Relè GND Positivo della batteria di avviamento + (il negativo della batteria di avviamento deve essere collegato al terminale negativo della batteria di servizio) Contatti relè programmabile K1 Contatti relè programmabile K2
F	Collegamento negativo della batteria M8.
G	Collegamento positivo della batteria M8.
H	Connettore per interruttore remoto: Cortocircuitare il morsetto sinistro e quello centrale per l'accensione. Cortocircuitare il morsetto destro e quello centrale per commutare in modalità “charger only”.
I	Contatto allarme: Da sinistra a destra: NO, NC, COM.
J	Ingresso in CA M6 (alimentazione di rete/terra) AC IN-2. Da sinistra a destra: L (fase), N (neutro).
K	Pulsanti per la modalità di impostazione
L	Collegamento primario di terra M8 (PE).
M	DIP switch per modalità di impostazione.
N	Interruttori scorrevoli, impostazione di fabbrica SW1= posizione giù (off), SW2 = posizione giù (off). SW1: Off = relè GND interno selezionato, On = relè GND esterno selezionato (per collegare il relè GND esterno: vedere E). SW2: Nessuna applicazione. Da utilizzare per future caratteristiche.
O	AC IN-2 M6 collegamento di terra (massa) .
P	AC IN-1 e AC OUT-1 M6 collegamento di terra (massa).

APPENDIX B: **Block diagram**
BIJLAGE B: **Blokschema**
ANNEXE B : **Schéma bloc**
ANHANG B: **Blockschaltbild**
APÉNDICE B: **Diagrama de bloques**
APPENDIX B: **Blockdiagram**
APPENDICE B: **Diagramma di blocco:**

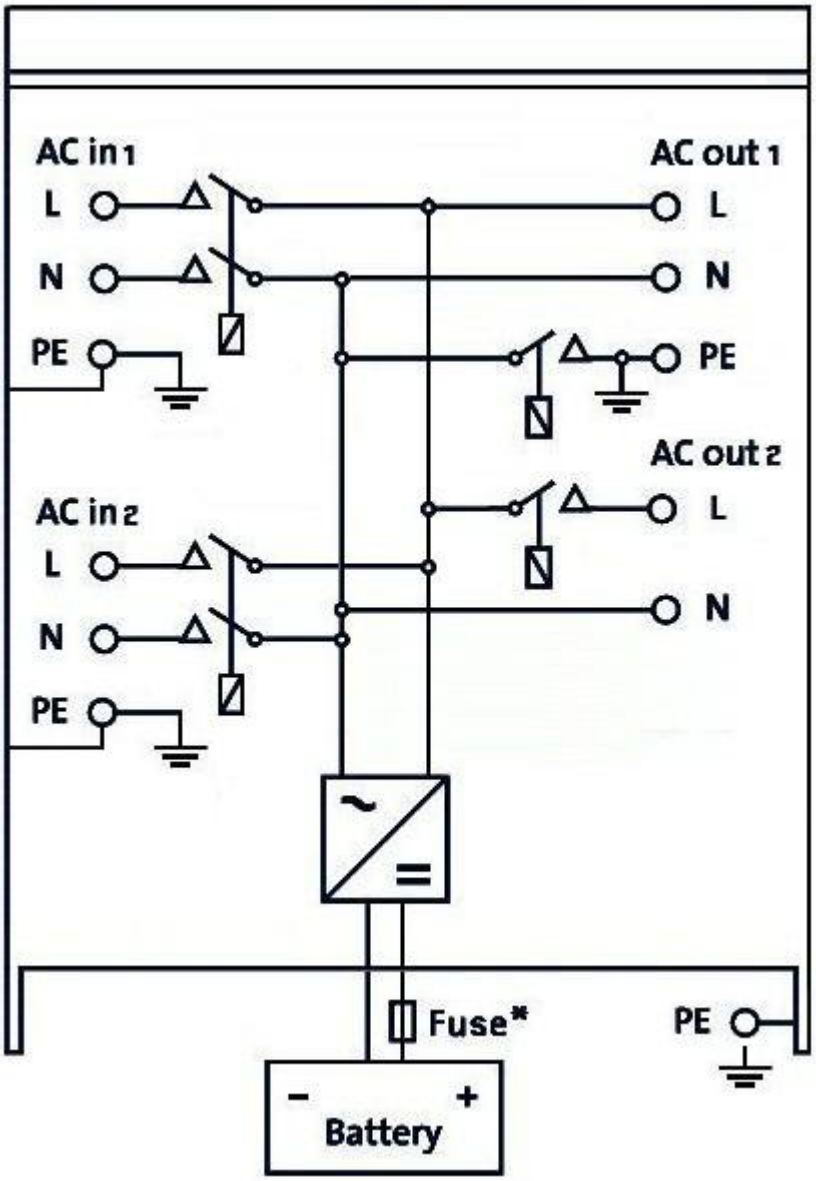

* See table in Chapter 4.2 “Recommended DC fuse”.
* Zie de tabel in Hst 4.2 “Aanbevolen DC zekering”
*Voir le tableau du Chapitre 4.2 « Fusible CC recommandé ».
* Beachte Tabelle in Kapitel 4.2 “Empfohlene DC-Sicherung”.
* Ver tabla en Capítulo 4.2 “Fusible CC recomendado”.
*Se tabellen i avsnitt 4.2 "rekommenderad DC-säkring".
* Vedere la tabella nel capitolo 4.2 “Fusibile CC consigliato”.

APPENDIX C: **Parallel connection**
BIJLAGE C: **Parallelaansluiting**
ANNEXE C : **Connexion en parallèle**
ANHANG C: **Parallelbetrieb**
APÉNDICE C: **Conexión en paralelo**
APPENDIX C: **Parallellanslutning**
APPENDICE C: **Collegamento in parallelo**

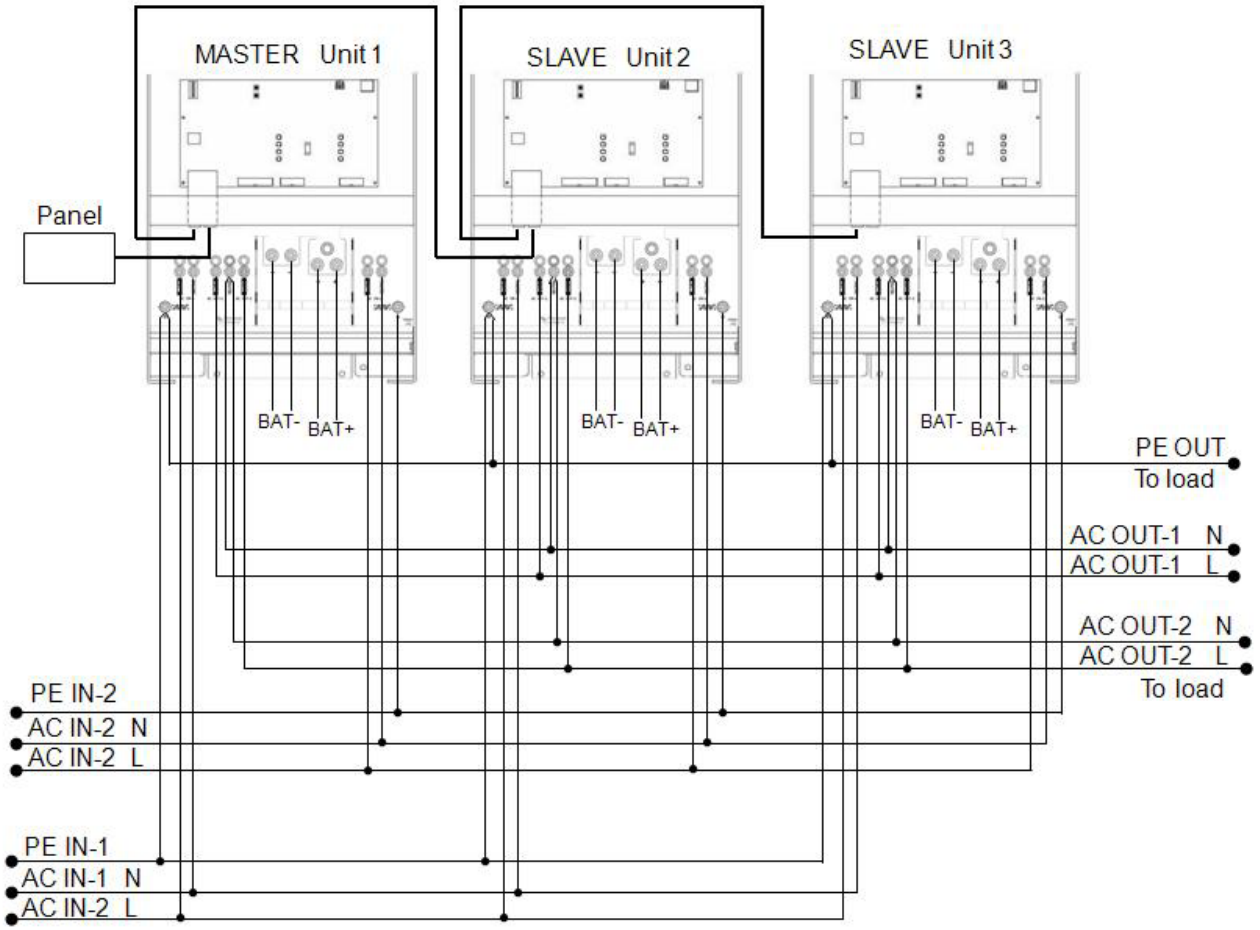

APPENDIX D: **Three-phase connection**
BIJLAGE D: **Driefasige aansluiting**
ANNEXE D : **Connexion triphasée**
ANHANG D: **Drei-Phasen-Betrieb**
APÉNDICE D: **Conexión trifásica**
APPENDIX D: **Tre-fasanslutning**
APPENDICE D: **Collegamento trifase**

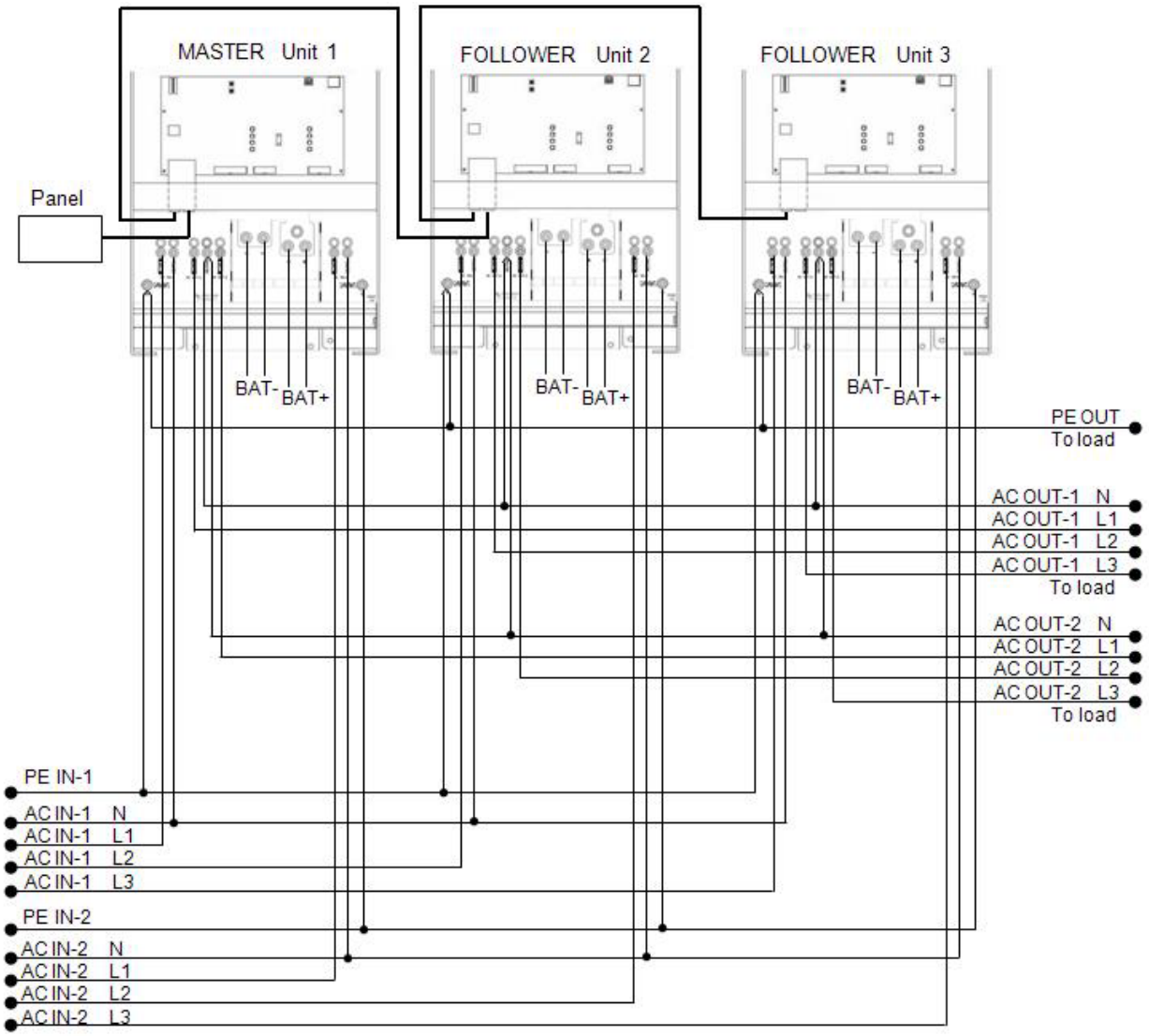

APPENDIX E: Charge characteristic
BIJLAGE E: Laadkarakteristieken
ANNEXE E : Courbe de charge
ANHANG E: Ladekennlinie
APÉNDICE E: Características de carga
APPENDIX E: Laddningsfunktion
APPENDICE E: Caratteristiche di carica

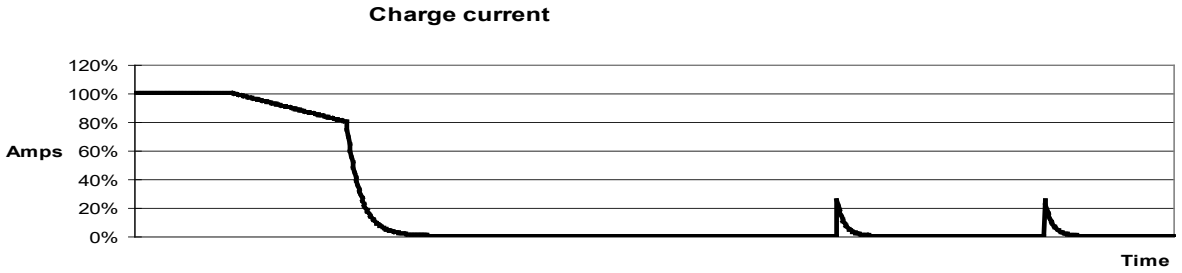

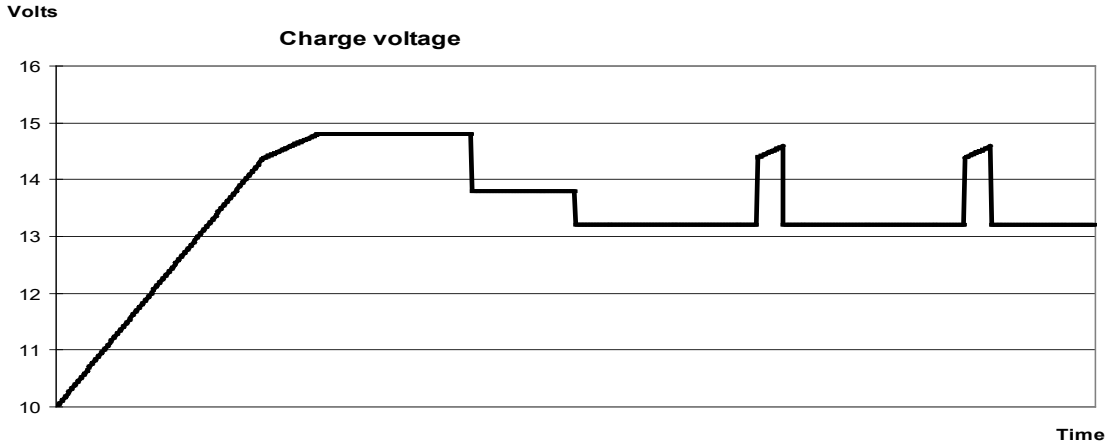

EN:

4-stage charging:

Bulk
Entered when charger is started. Constant current is applied until nominal battery voltage is reached, depending on temperature and input voltage, after which constant power is applied up to the point where excessive gassing is starting (14.4 V resp. 28.8 V, temperature-compensated).

Battery Safe
The applied voltage to the battery is raised gradually until the set Absorption voltage is reached. The Battery Safe Mode is part of the calculated absorption time.

Absorption
The absorption period is dependent on the bulk period. The maximum absorption time is the set Maximum Absorption time.

Float
Float voltage is applied to keep the battery fully charged

Storage
After one day of float charge the output voltage is reduced to storage level. This is 13,2 V resp. 26,4 V (for 12 V and 24 V charger). This will limit water loss to a minimum when the battery is stored for the winter season.
After an adjustable time (default = 7 days) the charger will enter Repeated Absorption mode for an adjustable time (default = one hour) to 'refresh' the battery.

NL:
4-fasig laden:
Maximale laadspanning
Ingevoerd wanneer de lader opgestart wordt. Constante stroom wordt toegepast, totdat de nominale accuspanning is bereikt, afhankelijk van de temperatuur en de ingangsspanning, waarna constante stroomvoorziening wordt toegepast tot op het moment dat er overmatige gasontwikkeling plaatsvindt (14,4 V resp. 28,8 V, temperatuurgecompenseerd).

Accubeveiliging
De spanning toegepast op de accu wordt geleidelijk aan opgevoerd, totdat de ingestelde Absorptiespanning is bereikt. De Accubeveiligingsmodus is onderdeel van de berekende absorptietijd.

Absorptie
De absorptieperiode is afhankelijk van de periode van maximale laadspanning. De maximale absorptietijd is de ingestelde Maximale Absorptietijd.

Druppellaadspanning
De druppellaadspanning wordt toegepast om ervoor te zorgen dat de accu volledig opgeladen blijft.

Opslag
Na één dag van druppellaadspanning wordt de uitgangsspanning teruggedrongen tot het opslagniveau. Dit is 13,2 V resp. 26,4 V (voor 12 V- en 24 V-laders). Dit zal het waterverlies tot een minimum beperken wanneer de accu opgeslagen wordt voor het winterseizoen.
Na een instelbare tijd (standard = 7 dagen) zal de adapter overgaan tot de Herhaalde Absorptiemodus gedurende een instelbare tijd (standaard = één uur) om de accu te 'verversen'.

FR:
Charge en 4 étapes :
Bulk
Mode présenté quand le chargeur est démarré. Un courant continu est appliqué jusqu'à ce que la tension nominale de la batterie soit atteinte, en fonction de la température et de la tension d'entrée, après quoi une puissance constante est appliquée jusqu'au point où un gazage excessif débute (14,4 V resp. 28,8 V, température corrigée).

Battery Safe
La tension appliquée à la batterie augmente de manière progressive jusqu'à ce que la tension d'absorption soit atteinte. Le mode « Battery safe » fait partie de la durée d'absorption calculée.

Absorption
La période d'absorption dépend de la période Bulk. La durée d'absorption maximale est celle qui est configurée.

Float
La tension Float est appliquée pour maintenir la batterie complètement chargée.

Storage
Après un jour de charge Float, la tension de sortie est réduite à un niveau de stockage. Ce qui représente resp 13,2 V et 26,4 V (pour un chargeur de 12 V et 24 V). Ceci limitera au minimum les pertes d'eau quand la batterie est stockée durant la saison hivernale.
Après un certain temps qui peut être défini (par défaut = 7 jours), le chargeur va entrer en mode Absorption répétée pour une période de temps qui peut aussi être ajustée (par défaut = 1 heure) pour « rafraîchir la batterie ».

DE:

4-stufiges Laden:

Konstantstromphase (Bulk)
Eingeleitet, wenn Ladegerät gestartet wird. Konstantstrom wird zugeführt, bis die nominale Batteriespannung erreicht wird. Dies ist abhängig von der Temperatur und der Eingangsspannung. Danach wird konstante Energie zugeführt, bis zu dem Punkt an dem die übermäßige Gasung einsetzt (14,4 V bzw. 28,8 V) temperaturkompensiert).

Battery Safe
Die an der Batterie anliegende Spannung wird schrittweise erhöht, bis die eingestellte Konstantspannung erreicht wird. Der Battery Safe Modus ist Teil der berechneten Konstantspannungsdauer.

Konstantspannungsphase (Absorption)
Die Konstantspannungsdauer hängt von der Konstantstromdauer ab. Die maximale Konstantspannungsdauer ist die eingestellte Maximale Konstantspannungsdauer.

Ladeerhaltungsspannungsphase (Float)
Die Ladeerhaltungsspannung wird dazu genutzt, um die Batterie im voll aufgeladenen Zustand zu halten.

Lagermodus (Storage)
Nach einem Tag in der Erhaltungsladungsphase wird die Ausgangsspannung auf das Niveau der Lagerungsspannung gesenkt. Das heißt auf 13,2 V bzw. 26,4 V (für 12 V und 24 V Ladegeräte). Dadurch wird der Wasserverlust weitestgehend minimiert, wenn die Batterie für den Winter eingelagert wird.
Nach einem regelbaren Zeitraum (Standard = 7 Tage) schaltet das Ladegerät in den Wiederholten-Konstantspannungsmodus und zwar für einen einstellbaren Zeitraum (Standard = eine Stunde), um die Batterie "aufzufrischen".

ES:

Carga de 4 – etapas

Bulk
Introducido al arrancar el cargador. Se aplica una corriente constante hasta alcanzar la tensión de la batería, según la temperatura y de la tensión de entrada, tras lo cual, se aplica una corriente constante hasta el punto en que empiece un gaseado excesivo (14,4 V resp. 28,8 V temperatura compensada).

BatterySafe
La tensión aplicada a la batería aumenta gradualmente hasta alcanzar la tensión de absorción establecida. El modo BatterySafe forma parte del tiempo de absorción calculado.

Absorption
El periodo de absorción depende del periodo inicial. El tiempo máximo de absorción máximo es el tiempo de absorción máximo establecido.

Float
La tensión de flotación se aplica para mantener la batería completamente cargada.

Almacenamiento
Después de un día de carga flotación, se reduce la tensión de salida a nivel de almacenamiento. Esto es 13,2 V resp. 26,4 V (para cargadores de 12 V y 24 V). Esto mantendrá la pérdida de agua al mínimo, cuando la batería se almacene para la temporada de invierno.
Tras un periodo de tiempo que puede ajustarse (por defecto = 7 días), el cargador entrará en modo “Repeated Absorption” (absorción repetida) durante un periodo de tiempo que se puede ajustar (por defecto = 1 hora) para “refrescar la batería.

SE

4-stegsladdning:

Bulk
Anges när laddaren är igång. Konstant ström avges till dess att den nominella batterispänningen uppnås, beroende på temperatur- och ingångsspänningen, och därefter avges konstant kraft upp till den punkt då det börjar bildas för hög gasning (14,4 V och 28,8 V respektive, med kompenserad temperatur).

Battery Safe
Spänningen som tillämpas på batteriet ökas gradvis till dess att fastställd absorptionsspänning uppnås. Läget Battery Safe är en del av den beräknade absorptionstiden.

Absorption
Absorptionsperioden beror på bulkperioden. Den maximala absorptionstiden är den fastställda maximala absorptionstiden.

Float
Floatspänning tillämpas för att hålla batteriet fullladdat

Förvaring
Efter en dags floatladdning minskar utgångsspänningen till förvaringsnivå. Det är 13,2 V resp. 26,4 V (för 12 V och 24 V laddare).
Detta begränsar vattenförlusten till ett minimum när batteriet förvaras under vintersäsongen.
Efter en inställningsbar tidsperiod (standard = 7 dagar) går laddaren in i upprepat absorptionsläge under en inställningsbar tid (standard = en timme) för att "fräscha upp" batteriet.

IT:

Carica a 4 fasi:

Bulk
Si attiva all'avviamento del caricabatterie. La corrente costante è applicata finché viene raggiunta la tensione nominale della batteria, in base alla temperatura e alla tensione di ingresso, dopodiché l'alimentazione costante è applicata al punto in cui inizia la gassificazione eccessiva (14,4 V e 28,8 V rispettivamente, temperatura compensata).

Battery Safe
La tensione applicata alla batteria è aumentata gradualmente finché si raggiunge la tensione di assorbimento. La modalità Battery Safe è parte del tempo di assorbimento calcolato.

Absorption
Il periodo di assorbimento dipende dal periodo di prima fase di carica. Il periodo di assorbimento max è impostato sul tempo di assorbimento max.

Float
La tensione di mantenimento viene applicata per mantenere la batteria completamente carica.

Storage
Dopo un giorno d carica di mantenimento, la tensione di uscita viene ridotta al livello di accumulo. Tale carica è di 13,2 V e 26,4 V rispettivamente per caricabatterie da 12 V e 24 V. Questo limiterà la perdita di acqua al minimo, quando la batteria è stoccata per la stagione invernale.
Dopo un periodo di tempo regolabile (predefinito = 7 giorni), il caricatore entra in modalità di assorbimento ripetuto per un tempo regolabile (predefinito = un'ora) per aggiornare la batteria.

APPENDIX F: **Temperature compensation**
BIJLAGE F: **Temperatuurcompensatie**
APPENDIX F: **Temperaturkompensation**
ANNEXE F : **Compensation de température**
APÉNDICE F: **Compensación de temperatura**
APPENDIX F: **Temperaturkompensation**
APPENDICE F: **Compensazione di temperatura**

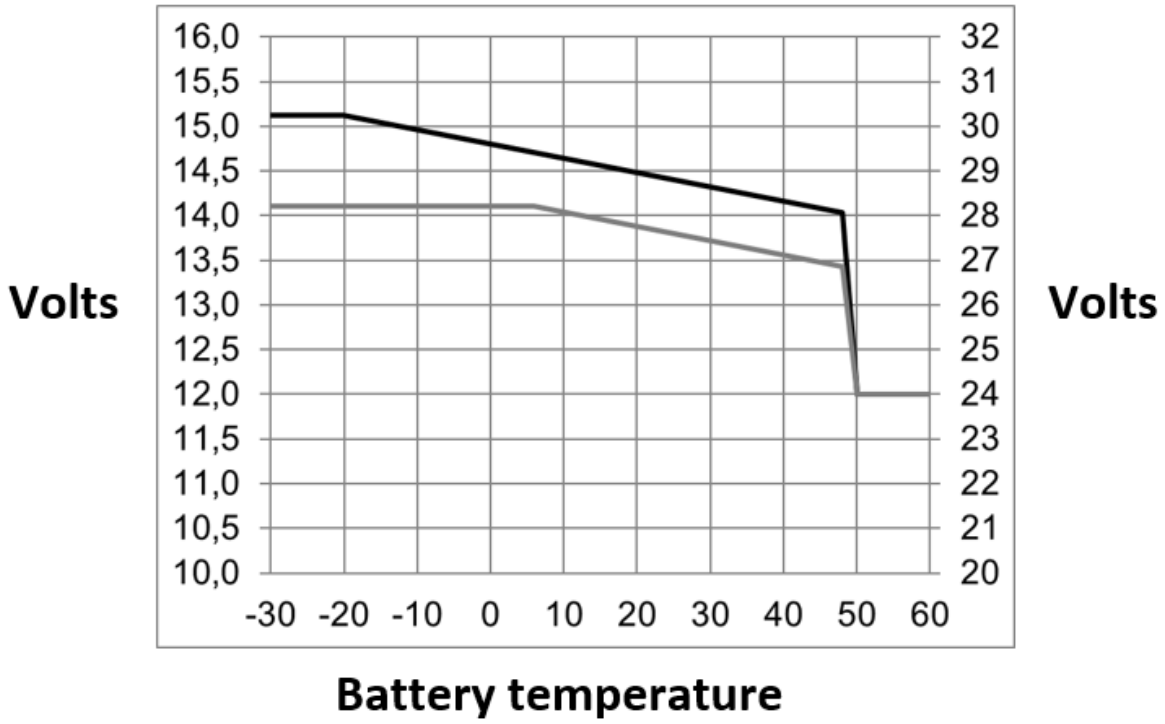

EN:
Default output voltages for Float and Absorption are at 25 °C.
Reduced Float voltage follows Float voltage and Raised Absorption voltage follows Absorption voltage.
In adjust mode temperature compensation does not apply.

NL:
Op 25 °C worden de standaarduitgansspanningen gebruikt voor Druppellaad- en Absorptiespanning.
Na Druppellaadspanning volgt een Verminderde Druppellaadspanning en na Absorptiespanning volgt een Verhoogde Absorptiespanning.
Temperatuurcompensatie is niet toepasbaar in een aangepaste modus.

FR:
Les tensions de charge Absorption et Float sont réglées en usine pour 25 °C.
Une tension Float réduite suit une tension Float, et une tension d'absorption augmentée suit une tension d'absorption.
En mode d'ajustement, la compensation de température ne s'applique pas.

DE:
Die standardmäßigen Ausgangsspannungen für den Ladeerhaltungs- und Konstantspannungsmodus gelten bei 25 C.
Reduzierte Ladeerhaltungsspannung folgt auf Ladeerhaltungsspannung und Erhöhte Konstantspannung folgt auf Konstantspannung.
Im Anpassungsmodus gilt die Temperaturkompensation nicht.

ES:
Las tensiones de salida por defecto para "Float" y "Absorption" están a 25 ºC.
La tensión de flotación reducida sigue a la tensión de flotación y la tensión de absorción incrementada sigue a tensión de absorción.
En modo de ajuste la compensación de temperatura no se aplica.

SV:
Standardutgångspänningar för float och absorption är vid 25 °C.
Reducerad floatspänning följer floatspänning och höjd absorptionsspännning följer absorptionsspänning.
I justerat läge tillämpas inte temperaturkompensation.

IT:
Le tensioni di uscita predefinite per le modalità mantenimento e assorbimento sono impostate su 25 °C.
Il Mantenimento ridotto segue la tensione di mantenimento e l'Assorbimento maggiorato segue la tensione di assorbimento.
Nella modalità di regolazione, la compensazione della temperatura è disabilitata.

APPENDIX G: **Dimensions Quattro 12V 5kVA, 24V 8kVA, 48V 8kVA/10kVA**
BIJLAGE G: **Afmetingen Quattro 12V 5kVA, 24V 8kVA, 48V 8kVA/10kVA**
ANNEXE G : **Dimensions Quattro 12V 5kVA, 24V 8kVA, 48V 8kVA/10kVA**
ANHANG G: **Maße Quattro 12V 5kVA, 24V 8kVA, 48V 8kVA/10kVA**
APÉNDICE G: **Dimensiones Quattro 12V 5kVA, 24V 8kVA, 48V 8kVA/10kVA**
APPENDIX G: **Dimensioner Quattro 12V 5kVA, 24V 8kVA, 48V 8kVA/10kVA**
APPENDICE G: **Misure Quattro 12V 5kVA, 24V 8kVA, 48V 8kVA/10kVA**

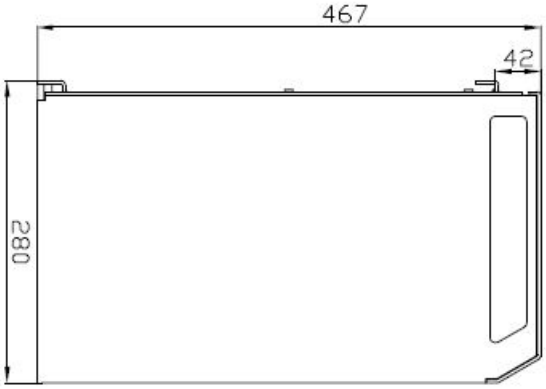

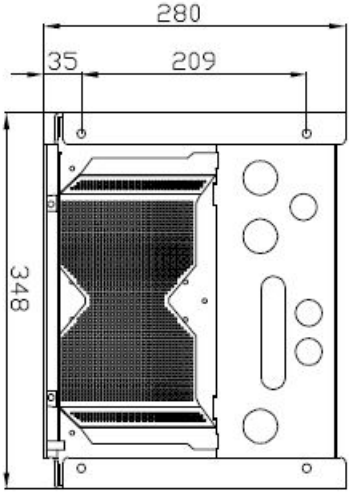

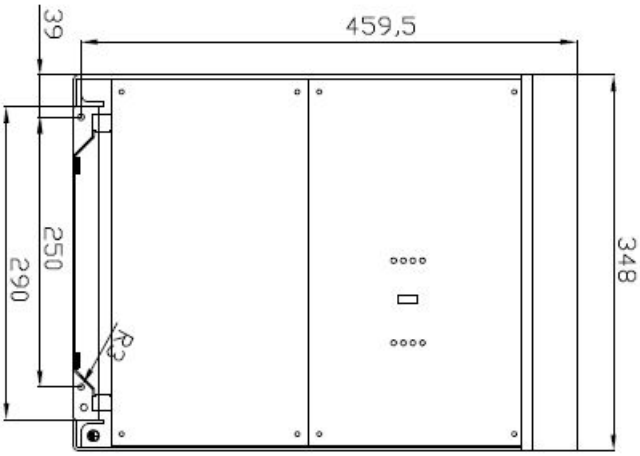

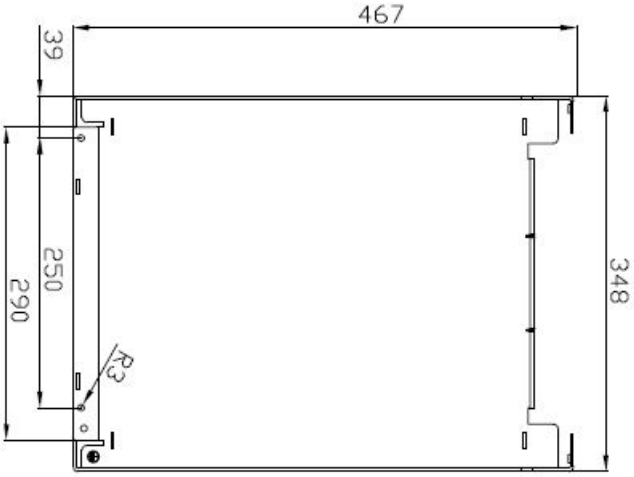

Dimensions wall mounting plate

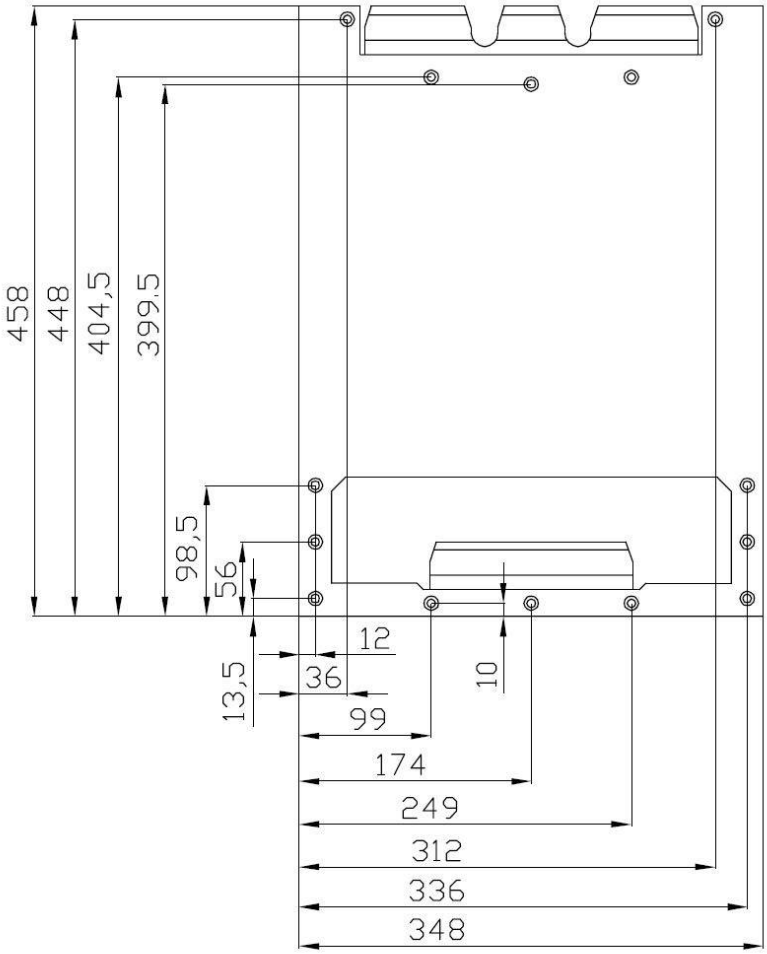

APPENDIX:	**Dimensions 24V 5kVA, 48V 5kVA**
BIJLAGE:	**Afmetingen 24V 5kVA, 48V 5kVA**
ANNEXE :	**Dimensions 24V 5kVA, 48V 5kVA**
ANHANG:	**Maße 24V 5kVA, 48V 5kVA**
APÉNDICE:	**Dimensiones 24V 5kVA, 48V 5kVA**
APPENDIX:	**Dimensioner 24V 5kVA, 48V 5kVA**
APPENDICE:	**Misure 24V 5kVA, 48V 5kVA**

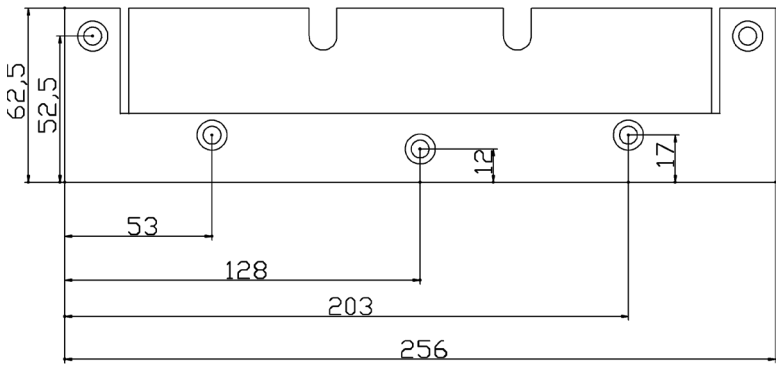

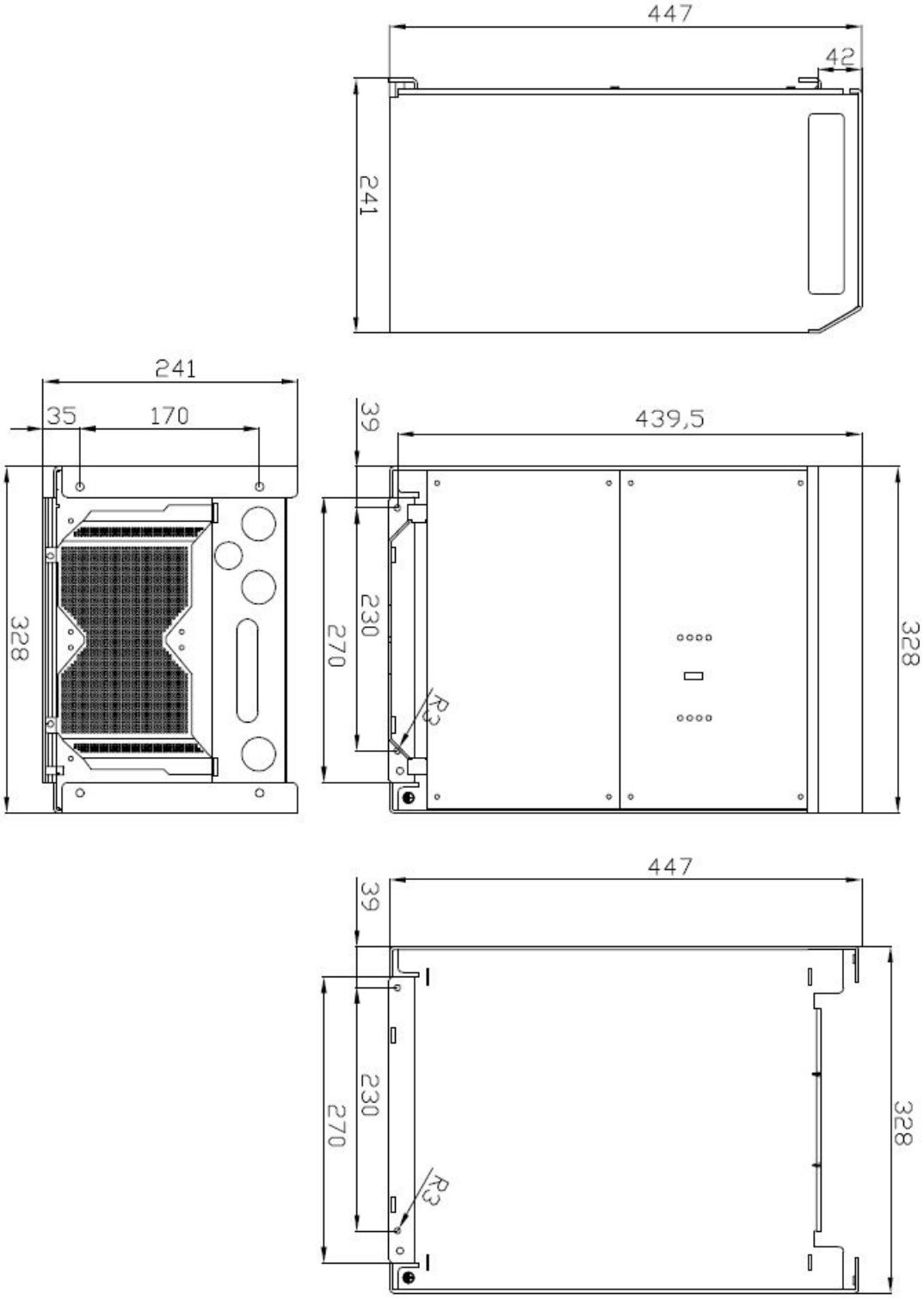
447
42
241
241
35
170
328
39
439,5
230
270
R3
328
447
39
230
270
R3
328

Dimensions 48V 5kVA-S
Afmetingen 48V 5kVA-S
Dimensions 48V 5kVA-S
Maße 48V 5kVA-S
Dimensiones 48V 5kVA-S
Dimensioner 48V 5kVA-S
Misure 48V 5kVA-S

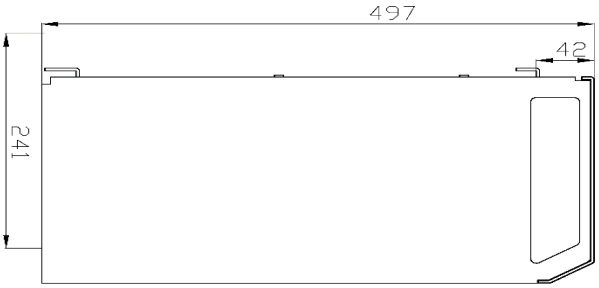

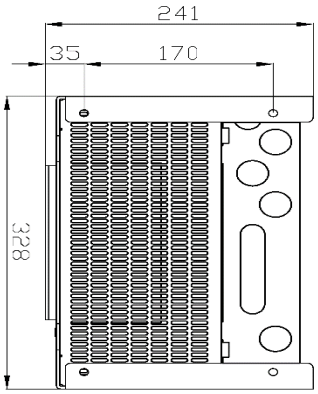

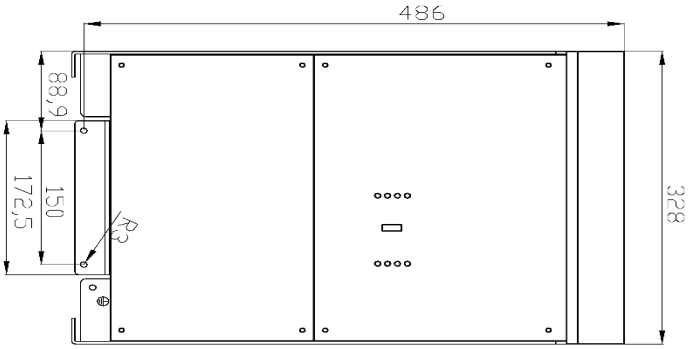

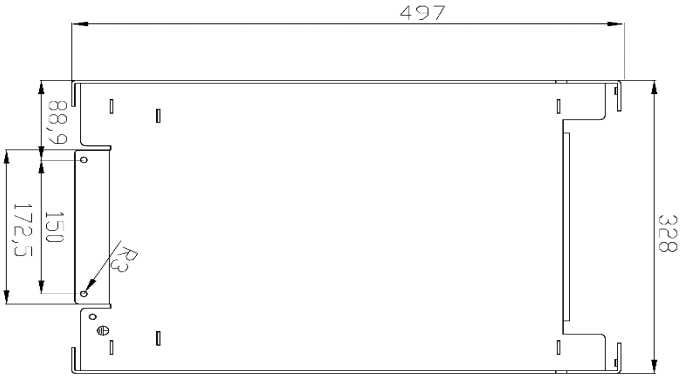

Dimensions Quattro 15KVA
Afmetingen Quattro 15kVA
Dimensions Quattro 15kVA
Maße Quattro 15kVA
Dimensiones Quattro 15kVA
Dimensioner Quattro 15kVA
Misure Quattro 15KVA

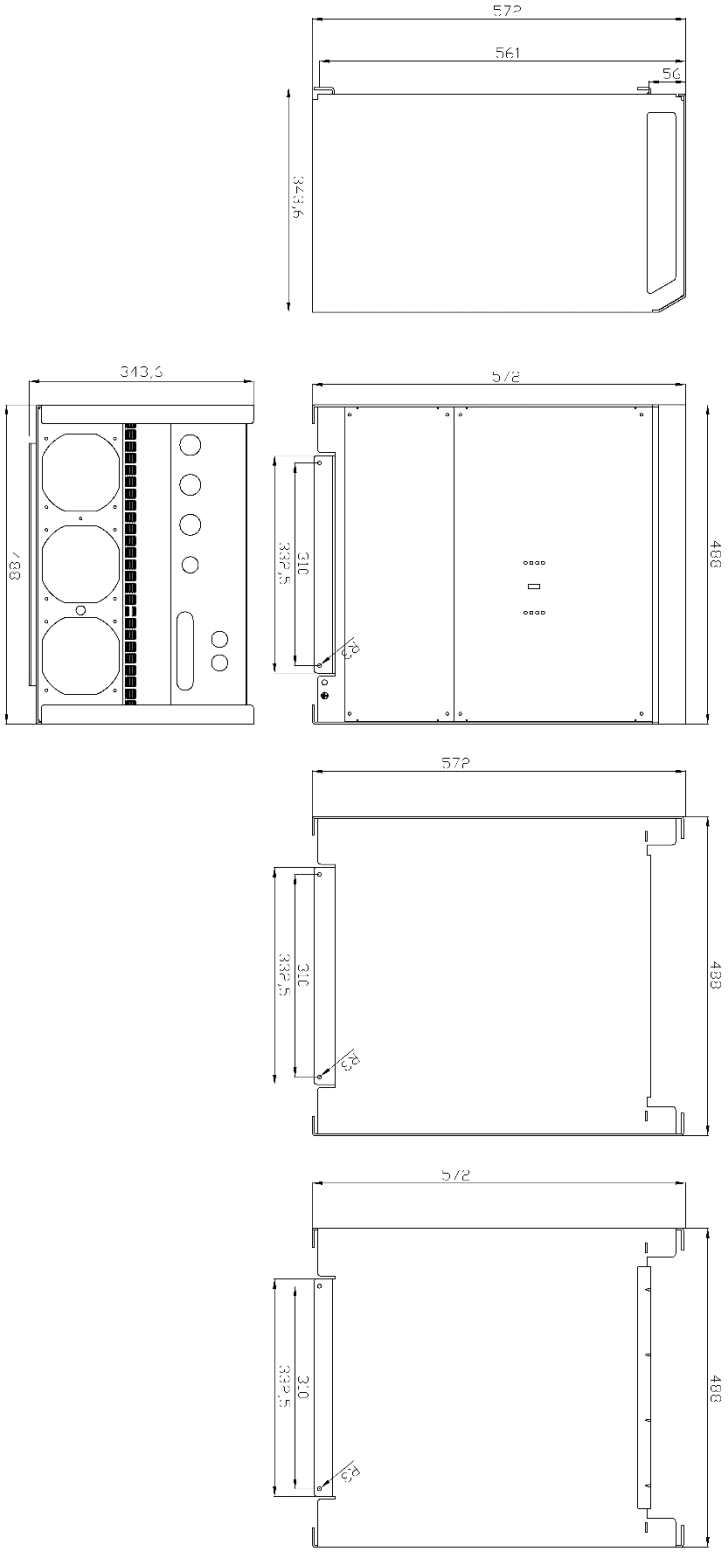

Dimensions wall mounting plate Quattro 15kVA

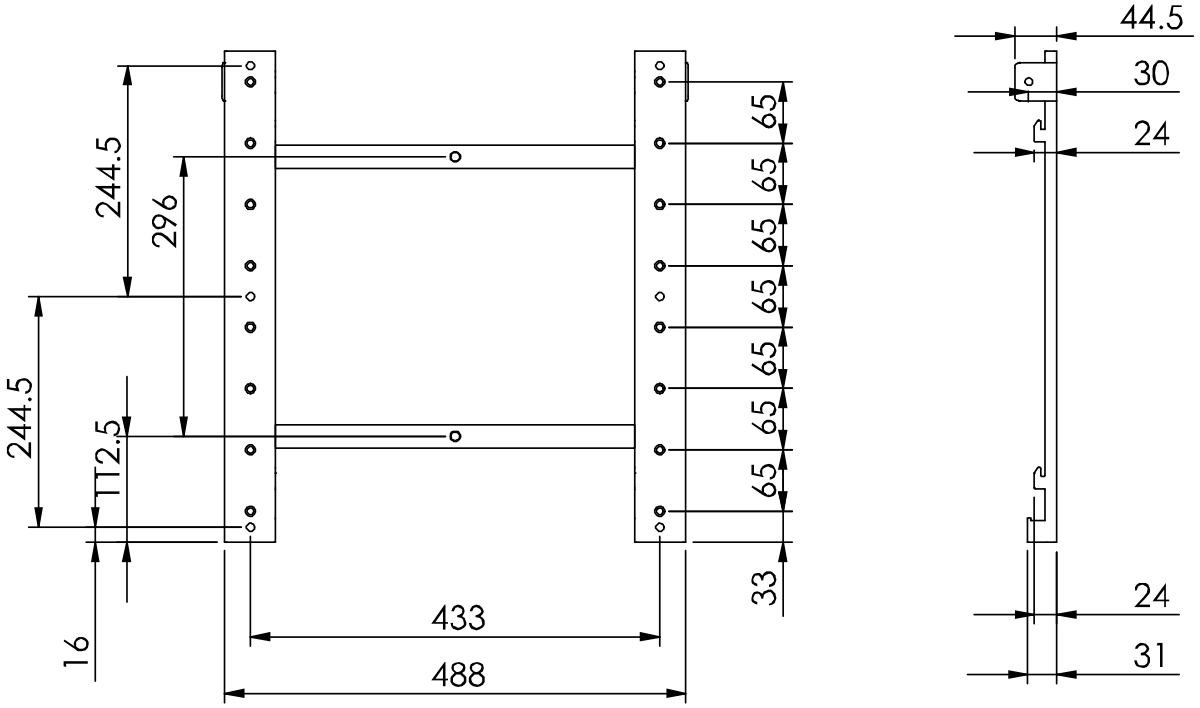

Victron Energy Blue Power

Distributor:

Serial number:

Version : 21
Date : January 6th, 2025

Victron Energy B.V.
De Paal 35 | 1351 JG Almere
PO Box 50016 | 1305 AA Almere | The Netherlands

E-mail : sales@victronenergy.com

www.victronenergy.com