Hi-MO X6 Explorer

LR5-54HTB

415~435M

- Suitable for Distribution Market
- Pure black for extreme elegance
- Better energy generation performance
- High-quality module guarantees long-term reliability

25 25-year Warranty for Materials and Processing

25 25-year Warranty for Extra Linear Power Output

Complete System and Product Certifications

IEC 61215, IEC 61730, UL 61730

ISO9001:2015: ISO Quality Management System

ISO14001: 2015: ISO Environment Management System

ISO45001: 2018: Occupational Health and Safety

IEC62941: Guideline for module design qualification and type approval

LONGi

Hi-MO X6 Explorer

LR5-54HTB 415~435M

22.3%	0~3%	<1.5%	0.40%
MAX MODULE EFFICIENCY	POWER TOLERANCE	FIRST YEAR POWER DEGRADATION	YEAR 2-25 POWER DEGRADATION

Additional Value

25-Year Power Warranty

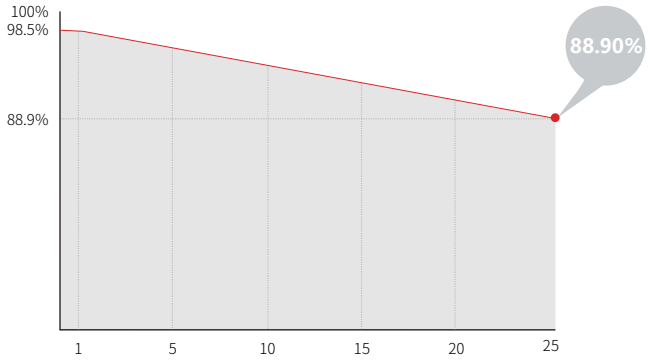

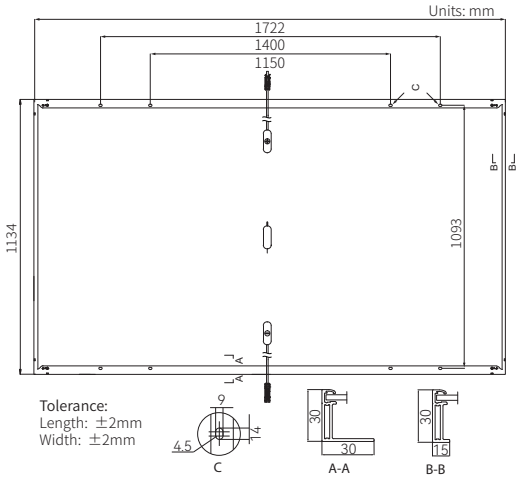

Mechanical Parameters

Cell Orientation	108 (6×18)
Junction Box	IP68
Output Cable	4mm², ±1200mm length can be customized
Glass	Single glass, 3.2mm coated tempered glass
Frame	Anodized aluminum alloy frame
Weight	20.8kg
Dimension	1722×1134×30mm
Packaging	36pcs per pallet / 216pcs per 20' GP / 936pcs per 40' HC

Electrical Characteristics

STC : AM1.5 1000W/m² 25°C NOCT : AM1.5 800W/m² 20°C 1m/s Test uncertainty for Pmax: ±3%

Module Type	LR5-54HTB-415M		LR5-54HTB-420M		LR5-54HTB-425M		LR5-54HTB-430M		LR5-54HTB-435M	
Testing Condition	STC	NOCT	STC	NOCT	STC	NOCT	STC	NOCT	STC	NOCT
Maximum Power (Pmax/W)	415	310	420	314	425	318	430	321	435	325
Open Circuit Voltage (Voc/V)	38.83	36.46	39.03	36.65	39.23	36.83	39.43	37.02	39.63	37.21
Short Circuit Current (Isc/A)	13.78	11.13	13.85	11.19	13.93	11.25	14.00	11.31	14.08	11.37
Voltage at Maximum Power (Vmp/V)	32.56	29.71	32.76	29.89	32.96	30.08	33.16	30.26	33.36	30.44
Current at Maximum Power (Imp/A)	12.75	10.44	12.83	10.50	12.90	10.56	12.97	10.62	13.05	10.68
Module Efficiency(%)	21.3		21.5		21.8		22.0		22.3	

Operating Parameters

Operational Temperature	-40°C ~ +85°C
Power Output Tolerance	0 ~ 3%
Voc and Isc Tolerance	±3%
Maximum System Voltage	DC1500V (IEC/UL)
Maximum Series Fuse Rating	25A
Nominal Operating Cell Temperature	45±2°C
Protection Class	Class II
Fire Rating	UL type 1 or 2 IEC Class C

Mechanical Loading

Front Side Maximum Static Loading	5400Pa
Rear Side Maximum Static Loading	2400Pa
Hailstone Test	25mm Hailstone at the speed of 23m/s

Temperature Ratings (STC)

Temperature Coefficient of Isc	+0.050%/°C
Temperature Coefficient of Voc	-0.230%/°C
Temperature Coefficient of Pmax	-0.290%/°C

LONGi

No.8369 Shangyuan Road, Xi'an Economic And Technological Development Zone, Xi'an, Shaanxi, China.

Web: www.longi.com

Specifications included in this datasheet are subject to change without notice. LONGi reserves the right of final interpretation. (20231113V19) **DG**

Only for Europe