GOODWE

User Manual

AC Charger

HCA Series

(7-22kW) G2

V1.5-2025-11-11

Copyright©GoodWe Technologies Co.,Ltd. 2025. All rights reserved.

No part of this manual can be reproduced or transmitted to the public platform in any form or by any means without the prior written authorization of GoodWe.

Trademarks

GOODWE and other GoodWe trademarks are trademarks of GoodWe Company. All other trademarks or registered trademarks mentioned in this manual are owned by GoodWe Company.

NOTICE

The information in this user manual is subject to change due to product updates or other reasons. This manual cannot replace the safety instructions or labels on the equipment unless otherwise specified.

CONTENT

1 About This Manual 1
1.1 Applicable Model 1
1.2 Target Audience 1
1.3 Symbol Definition 2

2 Safety Precaution 3
2.1 General Safety 3
2.2 AC Charger Safety 3
2.3 Personnel Requirements 4
2.4 Declaration of Conformity 5

3 Product Introduction 6
3.1 Product Overview 6
3.2 Application Scenarios 7
3.3 Charging Mode 9
3.4 Operating Status of the Charger 10
3.5 Functionality 10
3.6 Appearance 12
3.6.1 Parts Description 12
3.6.2 Dimension 14
3.6.3 Indicator Description 16
3.6.4 Nameplate 16

4 Check and Storage 17
4.1 Check Before Receiving 17
4.2 Deliverables 17
4.3 Storage 18

5 Installation 19
5.1 Installation Requirements 19
5.2 Installation 21
5.2.1 Moving the Charger 21
5.2.2 Installing the Charger (on the Wall) 22
5.2.3 Installing the Charger (on the Post) 23
5.2.4 Installing the MID Meter (Optional) 24

6 Electrical Connection 25
6.1 Safety Precaution 25
6.2 Connecting the RCBO Cable 27
6.3 Connecting the AC Cable 28
6.4 Connecting the Communication Cable 29
6.4.1 Connecting the RS485 Communication Cable 31
6.4.2 Connecting the LAN Communication Cable 32

6.4.3 Connecting the MID Meter Cable (Optional) 32

7 Equipment Commissioning 33

7.1 Check Before Power ON 33

7.2 Power On 33

7.3 Charging an EV 34

7.3.1 Starting Charging via SolarGo or SEMS Portal App 34

7.3.2 Scheduling Charging via SolarGo or SEMS Portal App 35

7.3.3 AUTO Start Mode 36

7.3.4 RFID Card Charging 36

8 System Commissioning 37

8.1 Indicator 37

8.2 Setting and Checking Charger Information via SolarGo APP (Installers) 37

8.2.1 Downloading and Installing the App 37

8.2.2 Log in the Charger 38

8.2.3 Introductions to the Main page 39

8.2.4 Configuring WiFi 40

8.2.5 Configuring Charging Mode 41

8.2.6 More 43

8.3 Setting and Checking Charger Information via SEMS Portal APP (Installers) 48

8.3.1 Downloading and Installing the App 48

8.3.2 Register an End User Account 48

8.3.3 App Login 49

8.3.4 Creating Plant 50

8.3.5 Configuring Charging Mode 51

8.3.6 Setting 54

9 Maintenance 58

9.1 Power Off the Charger 58

9.2 Dismantle the Charger 58

9.3 Discard the Charger 58

9.4 Routine Maintenance 58

9.5 Troubleshooting 59

10 Technical Parameters 61

1 About This Manual

This manual describes the product information, installation, electrical connection, commissioning, troubleshooting and maintenance of the charger. Read through this manual before installing and operating the product. All the installers and users have to be familiar with the product features, functions, and safety precautions. This manual is subject to update without notice. For more product details and latest documents, visit https://en.goodwe.com/.

1.1 Applicable Model

This manual applies to the listed chargers below: (Hereinafter referred to as HPA).

- GW7K-HCA-20
- GW11K-HCA-20
- GW22K-HCA-20

1.2 Target Audience

This manual applies to trained and knowledgeable technical professionals only. The technical personnel has to be familiar with the product, local standards, and electric systems.

1.3 Symbol Definition

Different levels of warning messages in this manual are defined as follows:

DANGER
Indicates a high-level hazard that, if not avoided, will result in death or serious injury.
WARNING
Indicates a medium-level hazard that, if not avoided, could result in death or serious injury.
CAUTION
Indicates a low-level hazard that, if not avoided, could result in minor or moderate injury.
NOTICE
Highlight and supplement the texts. Or some skills and methods to solve product-related problems to save time.

2 Safety Precaution

Please strictly follow these safety instructions in the user manual during the operation.

NOTICE

The charger is designed and tested in compliance with related safety rules. Read and follow all the safety instructions and cautions before any operations. Improper operation might cause personal injury or property damage as the charger is electrical equipment.

2.1 General Safety

NOTICE

- The information in this user manual is subject to change due to product updates or other reasons. This guide cannot replace the product labels or the safety precautions in the user manual unless otherwise specified. All descriptions in the manual are for guidance only.
- Before installations, read through the user manual to learn about the product and the precautions.
- All installations should be performed by trained and knowledgeable technicians who are familiar with local standards and safety regulations.
- Use insulating tools and wear personal protective equipment when operating the charger to ensure personal safety. Wear anti-static gloves, cloths, and wrist strips when touching electronic devices to protect the charger from damage.
- Strictly follow the installation, operation, and configuration instructions in this manual. The manufacturer shall not be liable for equipment damage or personal injury if you do not follow the instructions. For more warranty details, please visit: https://en.goodwe.com/warranty.

2.2 AC Charger Safety

DANGER

- Do not dismantle the charger modules personally. Do not extend the charging cable. Otherwise, it may cause Ingress Protection Rating derating or electric danger.
- The equipment supports charging Electric Vehicle (EV hereinafter) only. Do not charge other devices.
- After using the charging connector, please cover the charging plug properly, and wrap the charging cable around the charger.
- The charger and cables shall not be over bended, squeezed or entangled. Otherwise, it may cause damage to the equipment.
- Disconnect the charger and its upstream switches before installation, maintenance and other operations.
- It is strictly forbidden to touch the charging connector when the charger is live.

WARNING

Check whether the cover and appearance of the charger are normal regularly.

DANGER

- All labels and warning marks should be visible after the installation. Do not cover, scrawl, or damage any label on the equipment.
- Warning labels on the Charger are as follows:

	HIGH VOLTAGE HAZARD High voltage exists during the charger's running. Disconnect all incoming power and turn off the product before working on it.	5min	Delay discharge. Wait 5 minutes after power off until the components are completely discharged.
	Read through the user manual before any operations.		Potential risks exist. Wear proper PPE before any operations.
	High-temperature hazard. Do not touch the product under operation to avoid being burnt.		Do not dispose of the charger as household waste. Discard the product in compliance with local laws and regulations, or send it back to the manufacturer.
	CE Marking.		RCM Marking.
ANATEL	Brazil ANATEL Marking.		

2.3 Personnel Requirements

NOTICE

- Personnel who install or maintain the equipment must be strictly trained, learn about safety precautions and correct operations.
- Only qualified professionals or trained personnel are allowed to install, operate, maintain, and replace the equipment or parts.

2.4 Declaration of Conformity

EU

The product with wireless communication function sold in the European market meets the requirements of the following directives:

- Radio Equipment Directive 2014/53/EU (RED)
- Restrictions of Hazardous Substances Directive 2011/65/EU and (EU) 2015/863 (RoHS)

UK

The product with wireless communication function sold in the British market meets the requirements of the following directives:

- Radio Equipment Regulations 2017
- The Restrictions of the use of Certain Hazardous Substances in Electrical and Electronic Equipment Regulations 2012 (S.I. 2012/3032)

Brazil

The product with wireless communication function sold in the Brazil market meets the requirements of the following directives:

- Incorpora produto homologado pela Anatel sob número 06795-24-02673 .
- Este equipamento não tem direito à proteção contra interferência prejudicial e não pode causar interferência em sistemas devidamente autorizados. Para maiores informações, consulte o site da ANATEL www.gov.br/anatel/pt-br.

NOTICE
• 2.4G WiFi, operating frequency :2412-2472MHz, max e.i.r.p :18.99dBm • BLE 1M&2M, Operating frequency :2402-2480MHz, max e.i.r.p :2.99dBm • RFID 13.56MHz, max e.r.p: -47.50dBm

3 Product Introduction

3.1 Product Overview

HCA series product is an AC household charger mainly for EV charging. It can communicate with an inverter to use PV energy for EV charging, obtain smart meter data through the inverter for dynamic load management, communicate with a MID meter (MID certificated smart meter) to provide reimbursable bills. It supports RFID card startup, APP startup, and automatical startup by plugging in the charging plug. It also support charging protection, network monitoring, and so on.

Model

This manual applies to the listed chargers below:

- GW7K-HCA-20
- GW11K-HCA-20
- GW22K-HCA-20

Model description

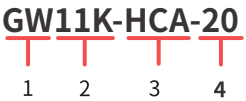

No.	Referring to	Explanation
1	Brand Code	GW: GoodWe
2	Norminal Power	• 7K: the nominal output power is 7kW. • 11K: the nominal output power is 11kW. • 22K: the nominal output power is 22kW.
3	Series	HCA: HCA Series
4	Generation	20: the second generation.

3.2 Application Scenarios

With PV & Battery

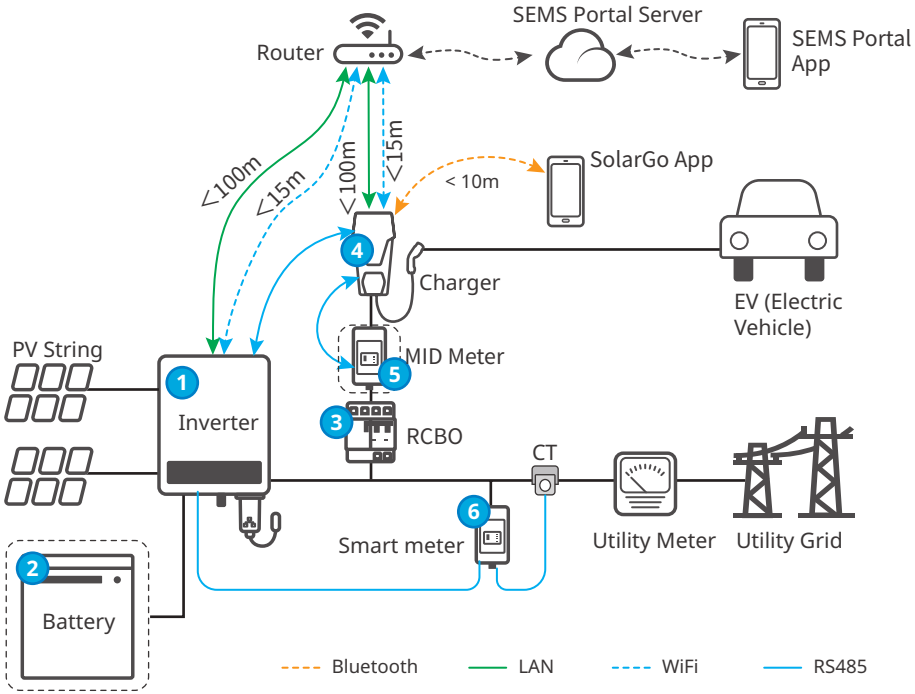

Without PV or Battery

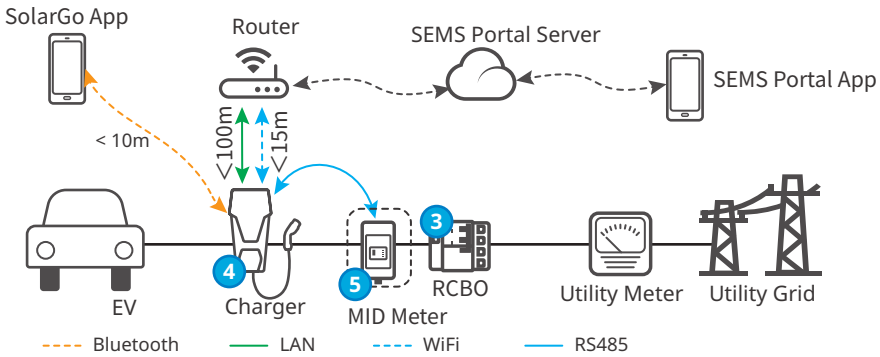

No.	Parts	Description
1	Inverter	GoodWe grid-tied PV inverters and hybrid inverters.
2	Battery	Batteries matched with GoodWe hybrid inverters.
3	RCBO	Provides residual current protection and overcurrent protection for the charger. Contact the charger manufacturer for purchasing.
4	Charger	GoodWe HCA series charger.
5	MID Meter	Collects the power consumption data of the EV charger which can be used for bill reimbursement.
6	Smart Meter	Delivered with the inverter or purchased from the inverter manufacturer.

Circuit Diagram

Below is the circuit diagram for HCA Charger:

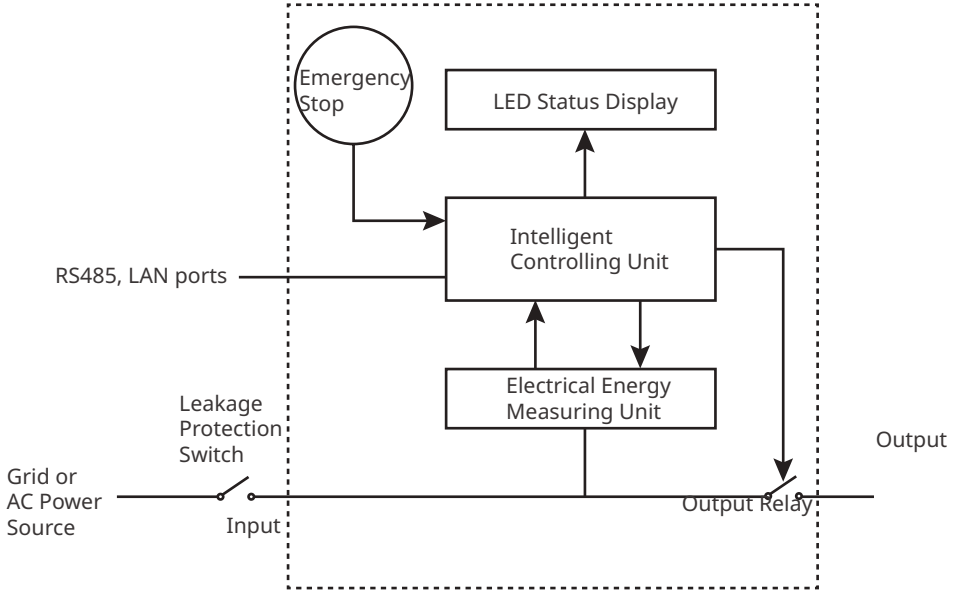

- The RS485 port is for the communication with PV inverters or MID meters.
- The LAN port is for the communication with the router.
- For single phase AC charger and three phase AC charger, the input port is used to connect with single-phase three-wire power cable from the grid and three-phase five-wire power cable from the grid respectively.
- The output port is used to connect with the Charging Plug.
- Emergency Stop refers to the emergency stop button.

Grid Types

NOTICE
The charger can not be connected to the IT Grid.

Single phase scenario:

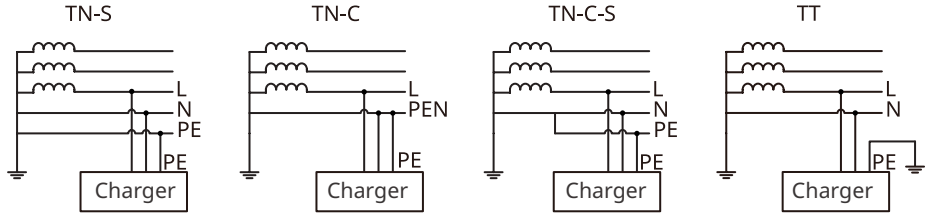

Three phase scenario:

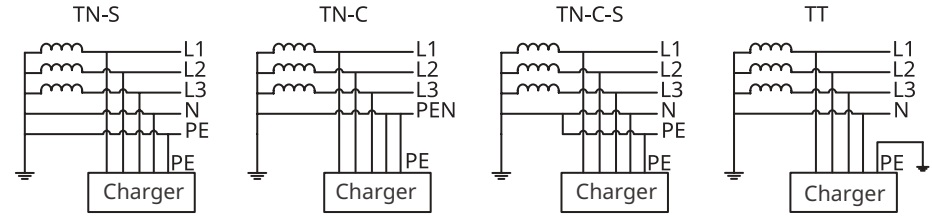

3.3 Charging Mode

NOTICE
For the PV priority and PV + battery modes, the charging power of the EV charger is limited by the maximum output power of the inverter.

Fast

The charger uses electricity from power grid, PV, or batteries to charge electric vehicles. The output power of the charger defaults to the nominal output power of the charger, and users can set the output power which is no more than the nominal output power.

PV priority

Only the PV power is used to charge the EV. Loads which can be grid load or back-up load take priority in PV power consumption, the remaining power will charge the EV.

PV + Battery

The PV power and battery are used to charge the EV. Loads Loads which can be grid load or back-up load take priority in power consumption, the remaining power will charge the EV.

3.4 Operating Status of the Charger

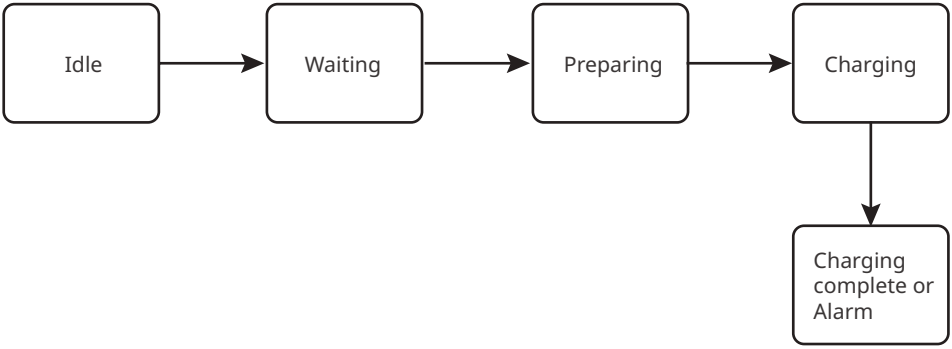

3.5 Functionality

NOTICE
• The actual charging speed depends on the site grid connection, available power for the EV charger, or the on board charger of the vehicle. • The minimum start-up current of each phase of the charger is 6A. For single-phase charging, the minimum charging power is 1.4 kW and for three-phase charging, it is 4.2kW. • Three-phase chargers support single-phase, two-phase, and three-phase charging, but the actual charging power is affected by the OBC. When a three-phase charger charges a vehicle that only supports single-phase charging, its max charging power is 1/3 of the nominal output power of the charger. When a three-phase charger charges a vehicle that only supports two-phase charging, its max charging power is 2/3 of the nominal output power of the charger.

Dynamic Load Control

After you turn on the dynamic load control, the charger will balance the charging speed (or even pause charging) based on the obtained meter data and the set grid connection current to avoid tripping the main fuse. When the actual current purchased is close to the set grid connection current, in order to avoid tripping, the charger will reduce the charging power till pause charging. The charger will restart automatically after the difference between the set grid connection current and the current purchased from the grid meets the starting conditions of the charger.

Ensure Minimum Charging Power

When the energy of the PV or PV + battery is insufficient, the charger can get support from the grid or the battery to maintain the desired power output if the Ensure Minimum Charging Power is turn on. The function is only available under the PV Priority or PV + Battery modes. Users can turn on the function through SolarGo App or SEMS App.

Status	Explanation
On	Continue charging with the support from the grid and battery to secure minimum required power for charging (1.4kW for7kW chargers, 4.2kW for 11/22kW chargers).
OFF	Discontinue charging if PV surplus is no longer available.

Phase Switch

NOTICE
Phase switch function is only available for three-phase charger.

Status	Explanation
On	When the total input power is lower than 4.2KW, the charger automatically switches to single-phase charging mode to avoid buying power from the grid or shutting down. The minimum charging power in single-phase charging mode is 1.4KW. (The phase switching time is about 3 minutes)
OFF	The charger remain three phase charging mode.

Safe and Reliable

- The ingress protection rating of the charger is IP66, and the ingress protection rating of the charging plug is IP55. With a high rating, the charger has excellent anti-dust and waterproof features and can be openominal and maintained outdoors.
- To protect the product and ensure a secure running status, the product is integnominal with over voltage and under voltage protection, over load protection, short-circuit protection, leakage protection, grounding, over temperature protection, EMS protection and protection against lighting.

3.6 Appearance

3.6.1 Parts Description

Charger

Type one

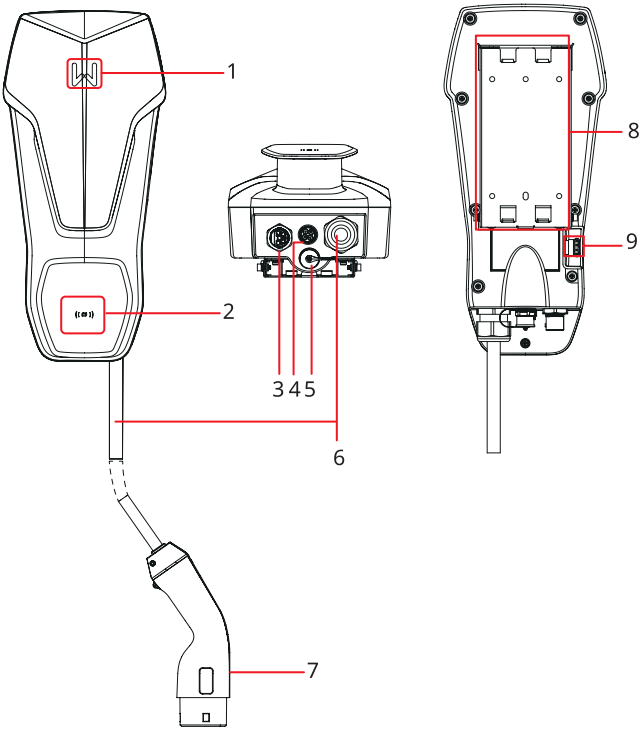

Type two

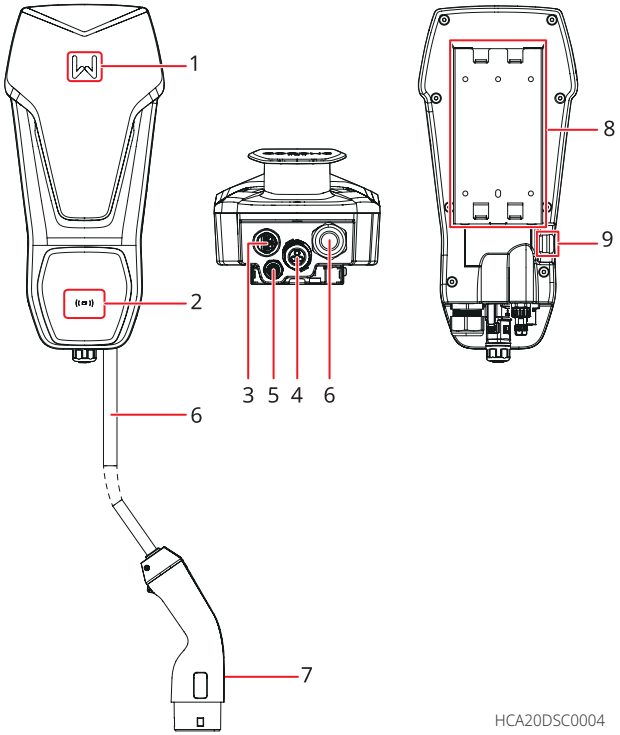

No.	Parts	Description
1	Indicator	Indicates the operating status of the charger.
2	RFID card area	For tapping card to activate charging.
3	Input Port for AC cable	Connects with single or three phase AC input cable.
4	RS485 communication port	Conncects the RS485 communication cable of an inverter or meter.
5	LAN communication port	Conncects the communication cable of a router.
6	Charging cable	-
7	Charging plug	Connected to EV charging port.
8	Mounting plate	Fixes the charger on the support material.
9	Emergency stop button	Used for emergency protection.

(Optional) Distribution Board

GW7K-HCA-20

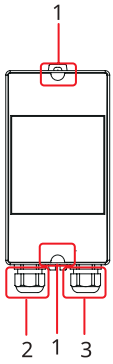

GW11K-HCA-20 and GW22K-HCA-20

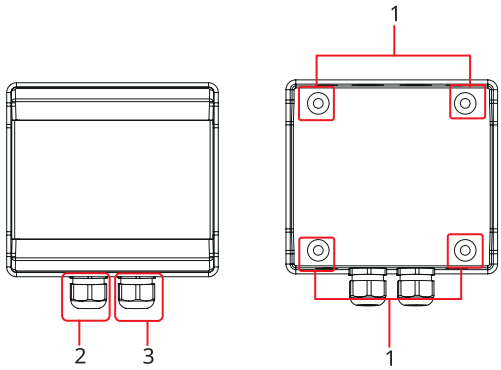

1. Holes for fixing
2. Input port for AC cable

3 Output port for AC cable

(Optional) Post

GW7K-HCA-20

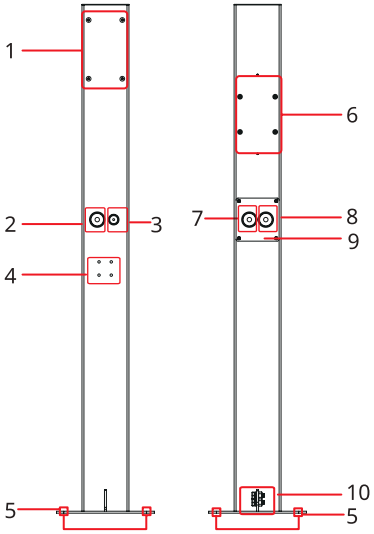

Front View Back View

GW11K-HCA-20 and GW22K-HCA-20

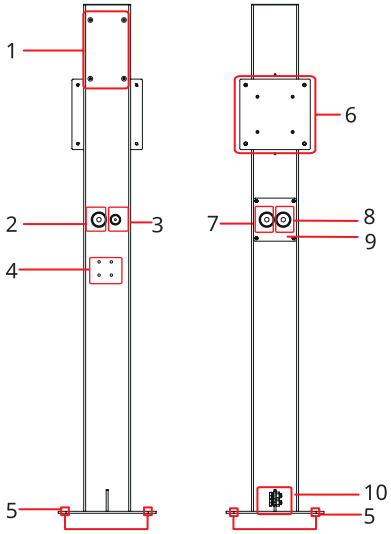

Front View Back View

1.	The charger mounting position	2.	AC cable port between RCBO and charger	3.	Communication cable port
4.	Dummy socket installation position	5.	Hole position for fixing the base	6.	RCBO installation position
7	RCBO AC input cable	8	AC cable port between RCBO and charger	9	Operation plate
10	PE port				

3.6.2 Dimension

Charger

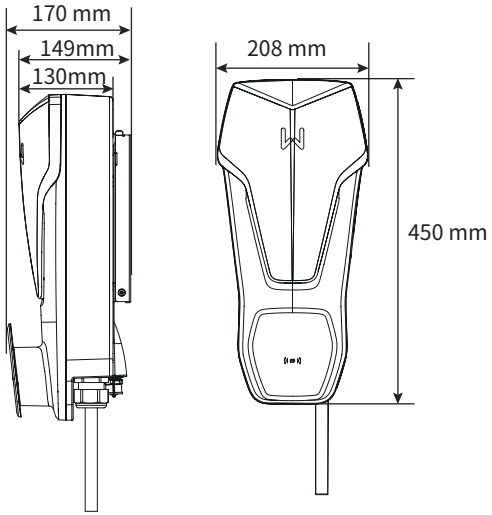

(Optional) RCBO Distribution Board

GW7K-HCA-20

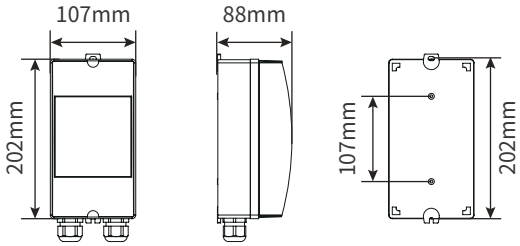

GW11K-HCA-20 and GW22K-HCA-20

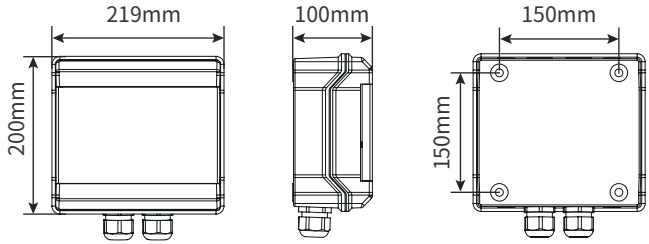

(Optional) Post

GW7K-HCA-20

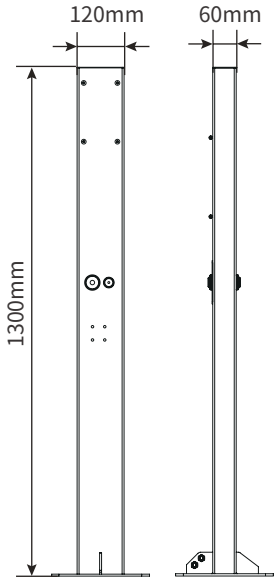

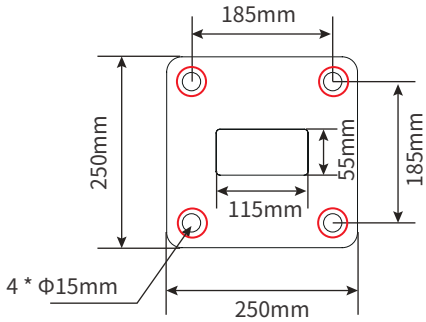

Bottom view of the post

GW11K-HCA-20 and GW22K-HCA-20

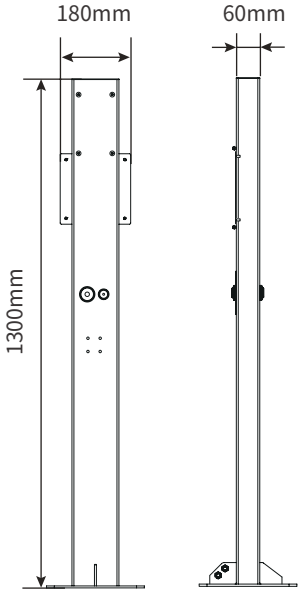

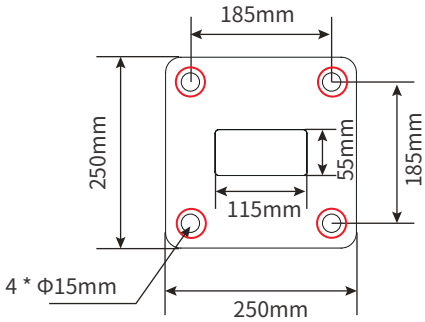

Bottom view of the post

(Optional) MID Meter

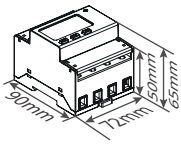

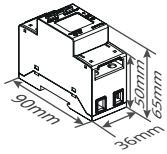

3.6.3 Indicator Description

Indicator	Color	Explanation
	Green ON	The charger is standby.
	Flash in Green	The system of the charger is upgrading.
	Blue ON	The charger is in charging.
	Red ON	A fault has occurred.
	Indicator light status when RFID card charging activating is abnormal	
	Red light on for 2s	Tap card before plugging the charging plug to the EV.
	Red light on flash twice	Charger and card do not match.

3.6.4 Nameplate

The nameplate is for reference only.

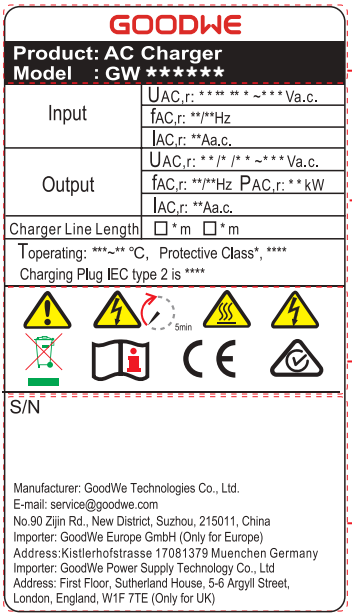

GOODWE trademark, product type, and product model

Technical parameters

Safety symbols and certification marks

Contact information and serial number

4 Check and Storage

4.1 Check Before Receiving

Check the following items before receiving the product.

1. Check the outer packing box for damage, such as holes, cracks, deformation, and others signs of equipment damage. Do not unpack the package and contact the supplier as soon as possible if any damage is found.
2. Check the charger model. If the charger model is not what you requested, do not unpack the product and contact the supplier.
3. Check the deliverables for correct model, complete contents, and intact appearance. Contact the supplier as soon as possible if any damage is found.

4.2 Deliverables

WARNING

Connect the cables with the delivered terminals. The manufacturer shall not be liable for the damage if other terminals are used.

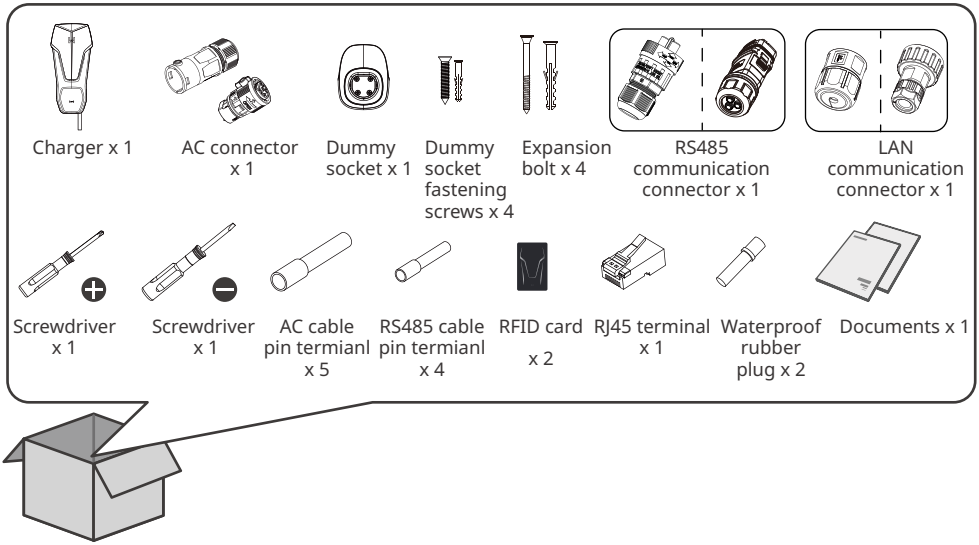

(Optional) GW7K-HCA-20

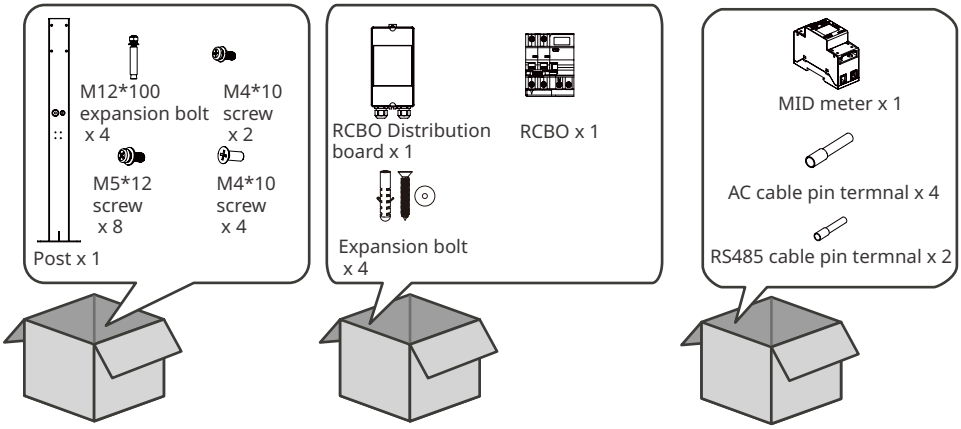

(Optional) GW11K-HCA-20 and GW22K-HCA-20

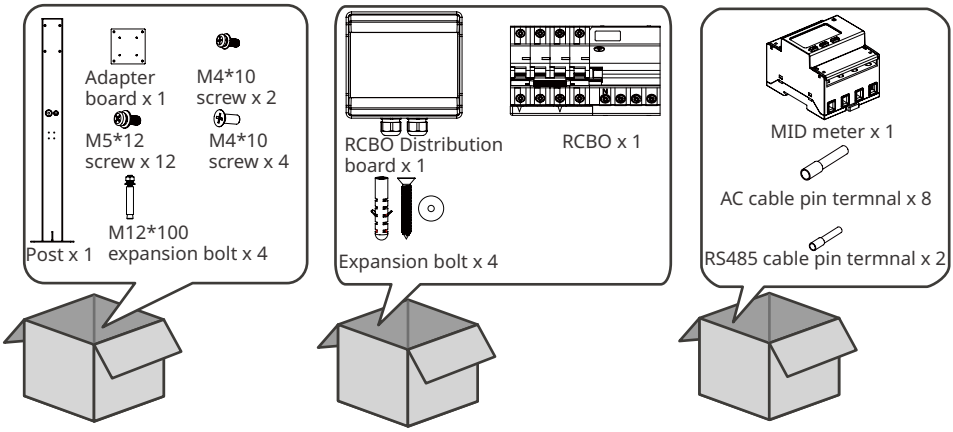

4.3 Storage

If the charger is not to be installed or used immediately, please ensure that the storage environment meets the following requirements:

1. Do not unpack the outer package or throw the desiccant away.
2. Store the charger in a clean place. Make sure the temperature and humidity are appropriate and no condensation.
3. The height and direction of the stacking chargers should follow the instructions on the packing box.
4. The chargers must be stacked with caution to prevent them from falling.
5. If the charger has been long term stored, it should be checked by professionals before being put into use.

5 Installation

5.1 Installation Requirements

Installation Environment Requirements

1. Do not install the equipment in a place near flammable, explosive, or corrosive materials.
2. Do not install the equipment in a place that is easy to touch. High temperature exists when the equipment is working. Do not touch the surface to avoid burning.
3. Avoid the water pipes and cables buried in the wall when drilling holes.
4. Install the equipment in a sheltered place.
5. The place to install the equipment shall be well-ventilated for heat radiation and large enough for operations.
6. The equipment with a high ingress protection rating can be installed indoors or outdoors. The temperature and humidity at the installation site should be within the appropriate range.
7. Install the equipment at a height that is convenient for operation and maintenance, electrical connections, and checking indicators and labels.
8. The altitude to install the charger shall be lower than the maximum working altitude 2000m.
9. Install the equipment away from electromagnetic interference.

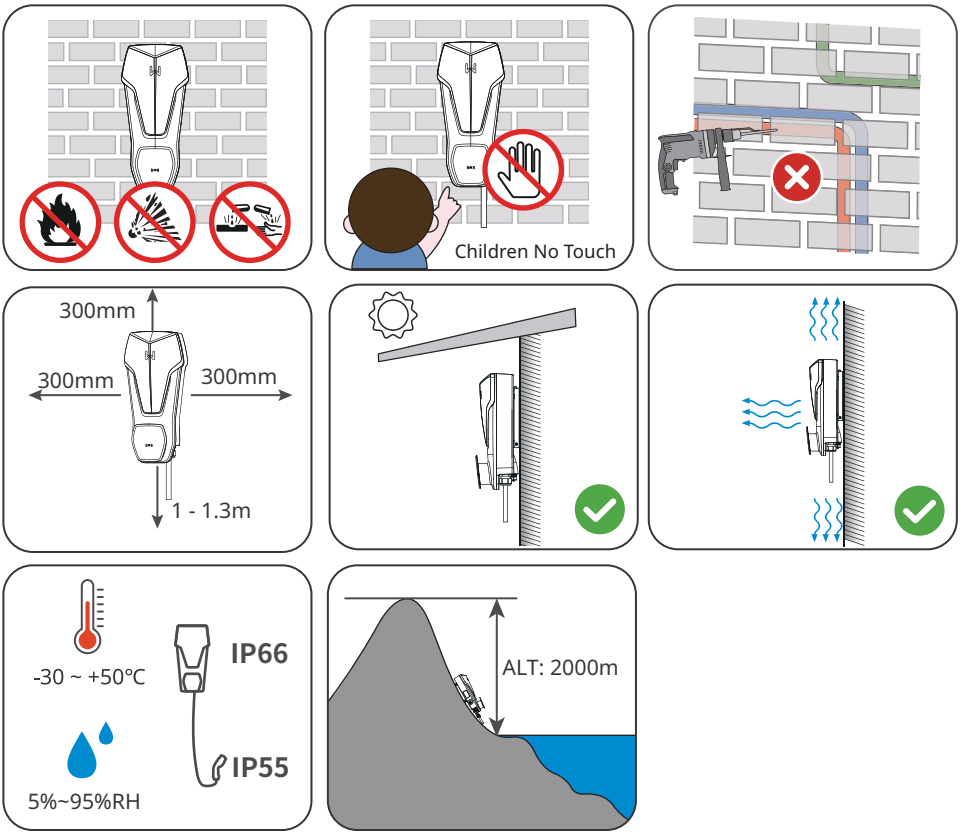

Mounting Support Requirements

- The mounting support shall be nonflammable and fireproof.
- Install the charger on a surface that is solid enough to bear the charger weight.

Installation Angle Requirements

- It is recommended to install the charger vertically.
- Do not install the charger upside down, forward tilt, back forward tilt, or horizontally.

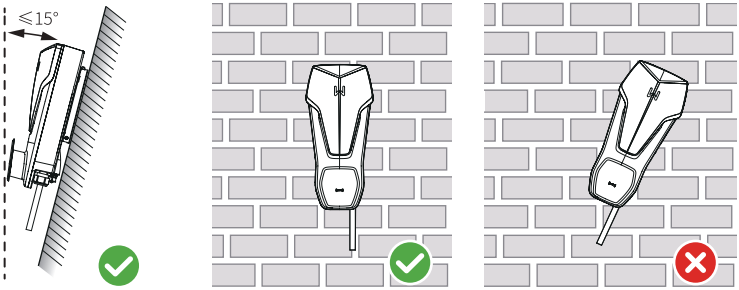

Installation Tool Requirements

The following tools are recommended when installing the equipment. Use other auxiliary tools on site if necessary.

5.2 Installation

5.2.1 Moving the Charger

CAUTION

Move the charger to the site before installation. Follow the instructions below to avoid personal injury or equipment damage.

1. Consider the weight of the equipment before moving it. Assign enough personnel to move the equipment to avoid personal injury.
2. Wear safety gloves to avoid personal injury.
3. Keep the equipment in balance during moving to avoid its falling down.

5.2.2 Installing the Charger (on the Wall)

NOTICE

- Avoid the water pipes and cables buried in the wall when drilling holes.
- Wear goggles and a dust mask to prevent the dust from being inhaled or contacting eyes when drilling holes.
- Make sure the charger is firmly installed in case of falling down.

Step 1 Take the mounting plate from the charger.

Step 2 Put the mounting plate, RCBO Distribution board and dummy socket on the wall horizontally and mark positions for drilling holes.

Step 3 Drill holes by using the hammer drill.

Step 4 Use the expansion bolts to fix the mounting plate, RCBO Distribution board and dummy socket on the wall.

Step 5 Install the charger on the mounting plate, and secure the mounting plate.

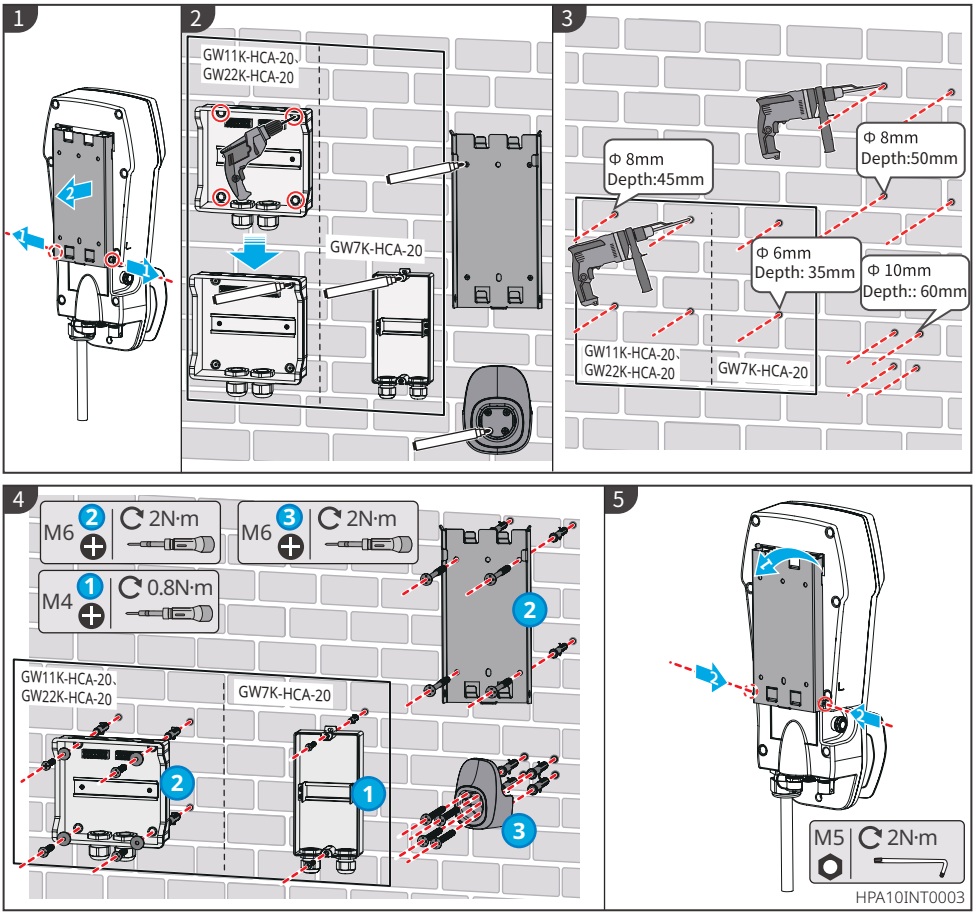

5.2.3 Installing the Charger (on the Post)

NOTICE
Contact the manufacturer to purchase a post if you need to install the charger on a Post.

Step 1 Take the operation plate off the post.

Step 2 Put the post on the ground vertically and mark positions for drilling holes. A cable pipe with a diameter of 60mm has to be embedded underground.

Step 3 Drill holes to 75 mm in depth by using the hammer drill with 15 mm in diameter.

Step 4 Run the embedded cable through the post, use the expansion bolts to fix the charger on the ground, and plug the spare fixing holes with screws.

Step 5 Install the RCBO distribution board and adapter board on the post.

Step 6 Install the dummy socket on the post.

Step 7 Take the mounting plate off the charger.

Step 8 Install the mounting plate on the post.

Step 9 Install the charger on the mounting plate.

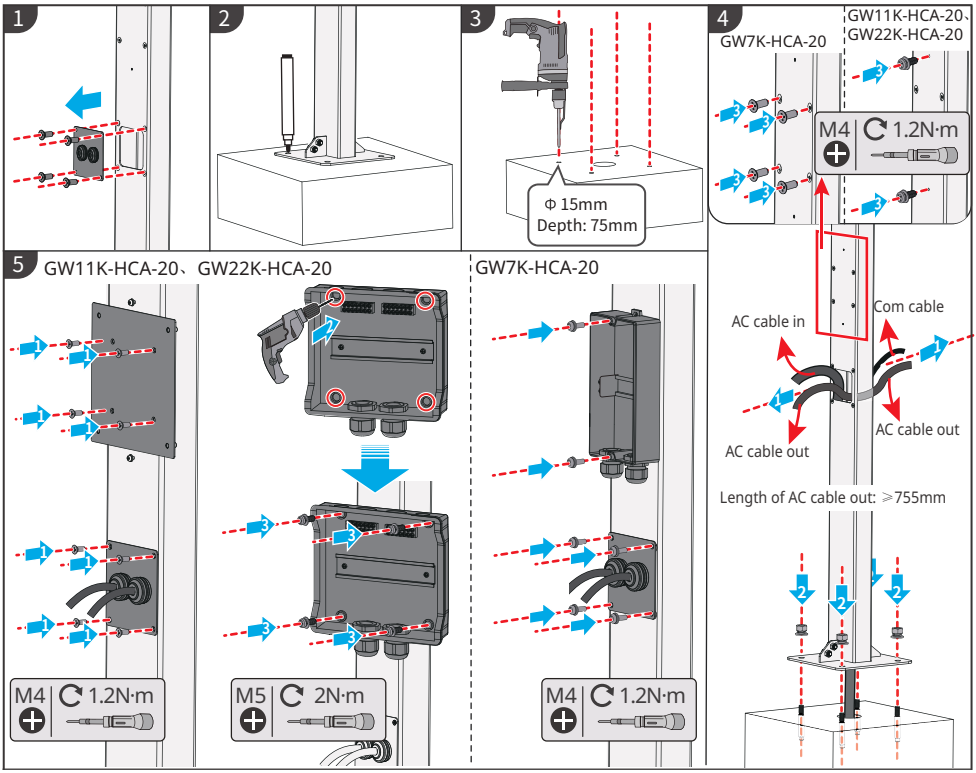

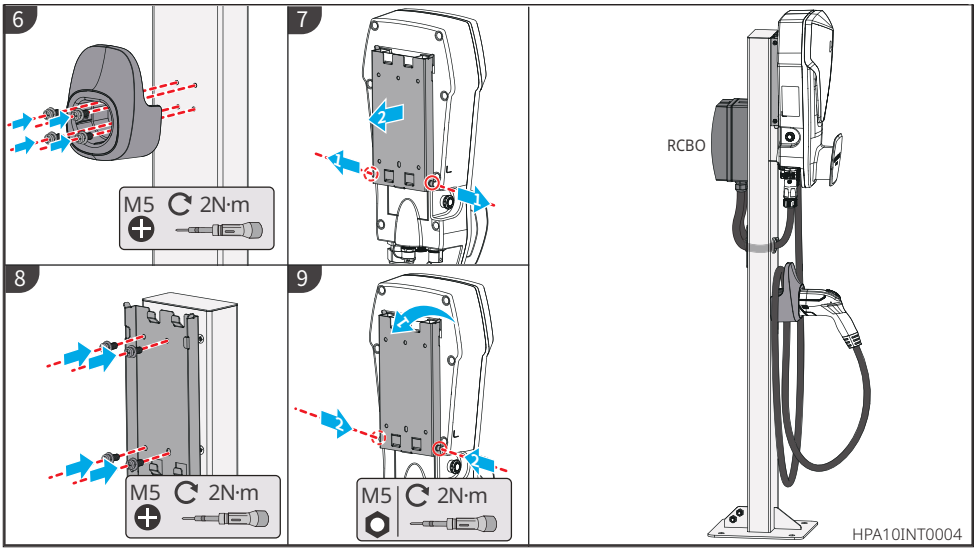

5.2.4 Installing the MID Meter (Optional)

NOTICE
Contact the manufacturer to purchase the MID meter if you need it.

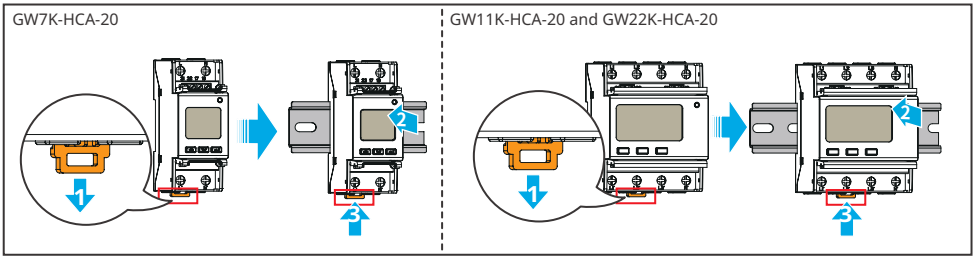

6 Electrical Connection

6.1 Safety Precaution

DANGER

- All operations, cables and parts specification during the electrical connection shall be in compliance with local laws and regulations.
- Disconnect the upstream switch before electrical connection. Do not work with power on. Otherwise, an electric shock may occur.
- Tie the same type cables together, and place them separately from cables of different types. Do not place the cables entangled or crossed.
- If the cable bears too much tension, the connection may be poor. Reserve a certain length of the cable before connecting it to the charger cable port.
- When crimping the terminals, ensure that the conductor part of the cable is in full contact with the terminals. Do not crimp the cable jacket with the terminal. Otherwise the charger may not operate, or its terminal block getting damaged due to heating and other phenomena because of unreliable connection after the operation.

WARNING

- Connect the AC input cables to the corresponding terminals such as “L1”, “L2”, “L3”, “N” and “PE” ports correctly. Otherwise it will cause damage to the charger.
- Ensure that the whole cable cores are inserted into the terminal holes. No part of the cable core can be exposed.
- Ensure that the cables are connected securely. Otherwise it will cause damage to the charger due to overheat during its operation.

NOTICE

- Wear personal protective equipment like safety shoes, safety gloves, and insulating gloves during electrical connections.
- All electrical connections should be performed by qualified professionals.
- Cable colors in this document are for reference only. The cable specifications shall meet local laws and regulations.
- To facilitate cabling, aluminum wires and solid copper wires are not recommended.

Wiring Specifications

Model	Cable	Specification
GW7K-HCA-20	Multi-strand three-core outdoor AC cable	• Copper, 105℃, 1000 V • Outer diameter: 13 - 14 mm • Conductor cross-sectional area: 6mm^2
GW11K-HCA-20	Multi-strand five-core outdoor AC cable	• Copper, 105℃, 1000 V • Outer diameter: 12.6 - 17.3 mm • Conductor cross-sectional area: 4 - 6 mm^2
GW22K-HCA-20		• Copper, 105℃, 1000 V • Outer diameter: 16.3 - 17.3 mm • Conductor cross-sectional area: 6mm^2[1]
[1]: It is suggested that the distance between the distribution board and the EV charger should not exceed 15 m.		

RCBO Specifications

NOTICE
The Specification of RCBO may be different according to the international rules and regulations.

6.2 Connecting the RCBO Cable

NOTICE

- The installation instructions below apply to devices purchased from the charger manufacturer. If the device is from another supplier, you have to refer to its user manual.
- AC cable 1 is connected to the utility grid or the AC output of the inverter, and AC cable 2 is connected to the AC input of the charger.

Step 1 Prepare the AC cable.

Step 2 Run the AC cable and terminal through the distribution box, screw the AC terminal on the RCBO.

Step 3 Install the top cover of the RCBO distribution box to prevent water or foreign matters.

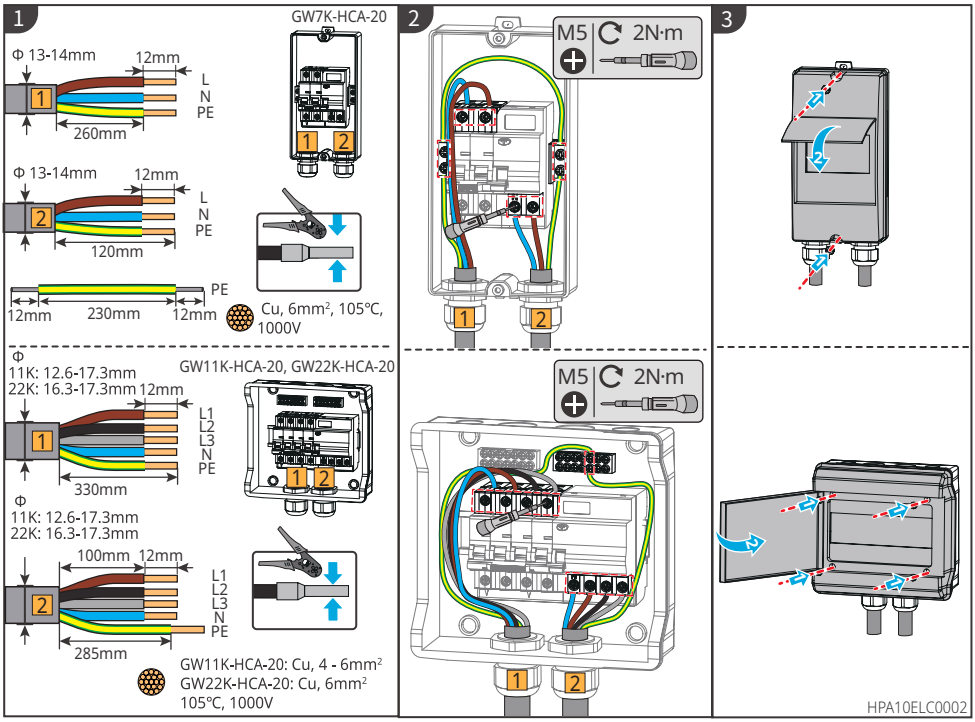

6.3 Connecting the AC Cable

DANGER

Connect the single-phase AC input cable to the GW7K-HCA-20 charger; and connect the three-phase AC input cable to the GW11K-HCA-20 and GW22K-HCA-20 chargers.

1. For GW7K-HCA-20: its voltage shall be 230Vac,L/N/PE; the current shall be 32A; and the frequency shall be 50/60Hz.
2. For GW11K-HCA-20: its voltage shall be 400Vac, 3L/N/PE; the current shall be 16A; and the frequency shall be 50/60Hz.
3. For GW22K-HCA-20: its voltage shall be 400Vac, 3L/N/PE; the current shall be 32A; and the frequency shall be 50/60Hz.

The following figure uses the three-phase AC cable L1, L2, L3, N, PE as an example. The single-phase AC cable are L, N, PE.

Step 1 Prepare the AC cable.

Step 2 Insert the AC input cable into the AC terminals and tighten it.

Step 3 Tignten the AC input terminal into the charger.

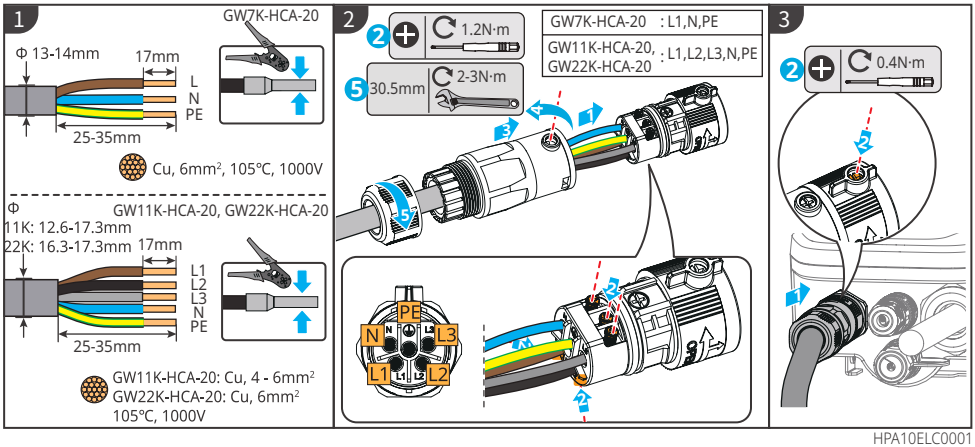

HPA10ELC0001

6.4 Connecting the Communication Cable

NOTICE

When connecting the communication line, make sure that the wiring port definition and the equipment are fully matched, and the cable alignment path should avoid interference sources, power lines, etc., so as not to affect signal reception.
The unused ports must be plugged, to avoid affecting the protection performance of the charger.
The RS485_A1/B1 ports of the charger is for the communication with the inverter. For the specific RS485 port of the inverter, please refer to the corresponding inverter manual.
After the devices are powered on, please confirm that the inverter connection status is solid green in SolarGo, otherwise the inverter connection fails.

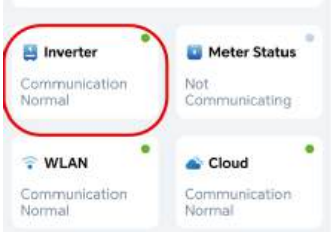

Type one

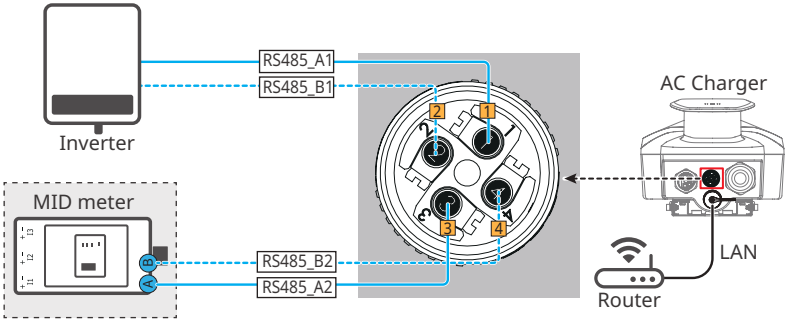

Type two

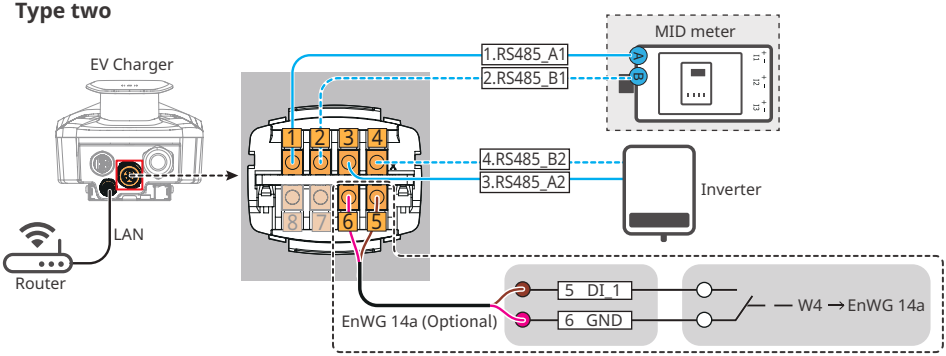

HCA20ELC0004

Inverter Type	Series/ Power Range	Model	ARM Software Version
On-grid Inverter	SDT G2	GW5K-DT GW6K-DT GW8K-DT GW10KT-DT GW12KT-DT GW15KT-DT	59.183 or above
	SDT G3	GW4000-SDT-30 GW5000-SDT-30 GW6000-SDT-30 GW8000-SDT-30 GW10K-SDT-30 GW10K-SDT-EU30 GW12K-SDT-30 GW15K-SDT-30 GW17K-SDT-30 GW20K-SDT-30 GW12KLV-SDT-C30 GW17KLV-SDT-C30 GW23K-SDT-C30 GW25K-SDT-C30 GW27K-SDT-C30 GW20K-SDT-31 GW25K-SDT-P31 GW30K-SDT-C30	05.56 or above
		GW50K-SDT-C30	0.6 or above
		GW5000-SDT-AU30 GW6000-SDT-AU30 GW8000-SDT-AU30 GW9990-SDT-AU30 GW15K-SDT-AU30 GW20K-SDT-AU30 GW25K-SDT-AU30 GW29K9-SDT-AU30 GW25K-SDT-30 GW30K-SDT-30	0.0 or above
Hybrid Inverter	ET G1 (5-10kW)	GW5K-ET GW6.5K-ET GW8K-ET GW10K-ET GW10KL-ET GW8KL-ET GW5KN-ET GW8KN-ET GW10KN-ET GW5KL-ET GW6KL-ET GW6.5KN-ET	30.290 or above
	ET G2 (6-15kW)	GW6000-ET-20 GW8000-ET-20 GW9900-ET-20 GW10K-ET-20 GW12K-ET-20 GW15K-ET-20	13.436 or above
	ET（15-30kW)	GW12KL-ET GW15K-ET GW18KL-ET GW20K-ET GW29.9K-ET GW30K-ET GW25K-ET	13.436 or above
	ES G2 (3-6kW)	GW3000-ES-20 GW3600-ES-20 GW5000-ES-20 GW6000-ES-20 GW3600M-ES-20 GW5000M-ES-20 GW6000M-ES-20 GW3500L-ES-BR20 GW3600-ES-BR20 GW6000-ES-BR20	10.427 or above
	EHB	GW9.99K-EHB-AU-G11 GW8.6K-EHB-AU-G11 GW5K-EHB-AU-G11	31.309 or above
	EH Plus	GW3600N-EH GW5000N-EH GW5000N-EH-BE GW6000N-EH	

Residential All-In-One Energy Storage System	ESA	GW3K-EHA-G20 GW6K-EHA-G20 GW9.999K-EHA-G20	GW3.6K-EHA-G20 GW8K-EHA-G20	GW5K-EHA-G20 GW10K-EHA-G20	02.100 or above

6.4.1 Connecting the RS485 Communication Cable

NOTICE

- Please prepare outdoor twisted pair cables that meet local standards by yourself.
- When the RS485 port is vacant, please plug the connector with the provided waterproof rubber plug and connect the connector to the charger.

Step 1 Prepare the communication cable.

Step 2 Fasten the cable to the connector.

Step 3 Connect the connector to the charger.

Type one

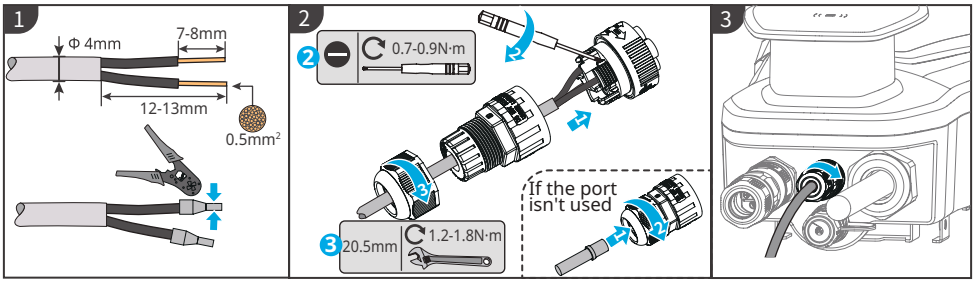

Type two

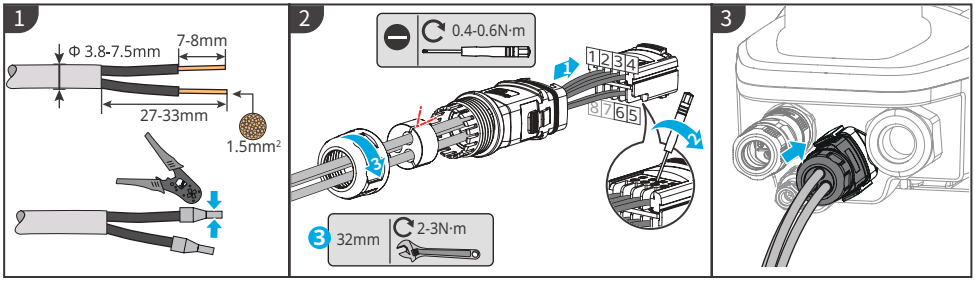

HCA20ELC0007

6.4.2 Connecting the LAN Communication Cable

NOTICE

- Please prepare the communication cable by yourself.
- When the LAN-2 port is vacant, please plug the connector with the provided waterproof rubber plug and connect the connector to the charger.

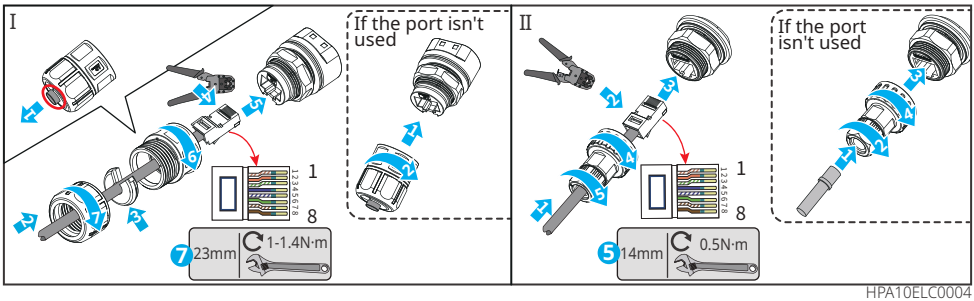

HPA10ELC0004

6.4.3 Connecting the MID Meter Cable (Optional)

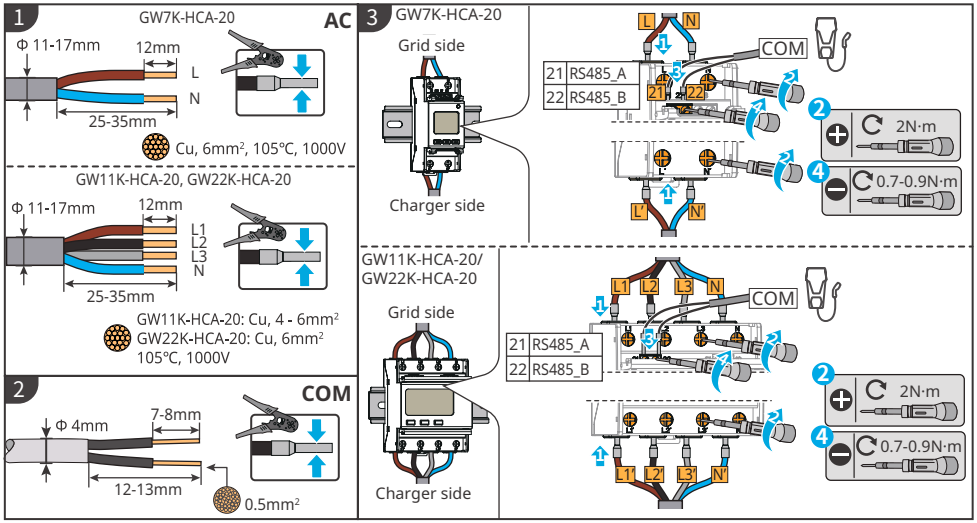

HCA20ELC0005

7 Equipment Commissioning

7.1 Check Before Power ON

No.	Checking Item
1	The charger is firmly installed at a clean place that is well-ventilated and easy to operate.
2	The AC input and communication cables are connected correctly and securely.
3	Cable ties are intact, routed properly and evenly.
4	Unused ports and terminals are sealed.
5	The voltage, frequency and other factors of the grid are in consistent with the working requirement of the charger.

7.2 Power On

Connected to the grid

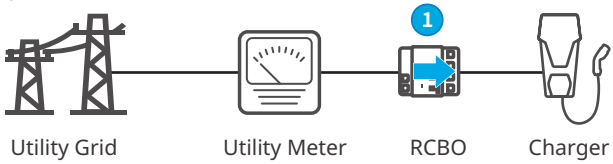

Turn on the RCBO between the charger and the grid.

Connected to PV String and Batteries

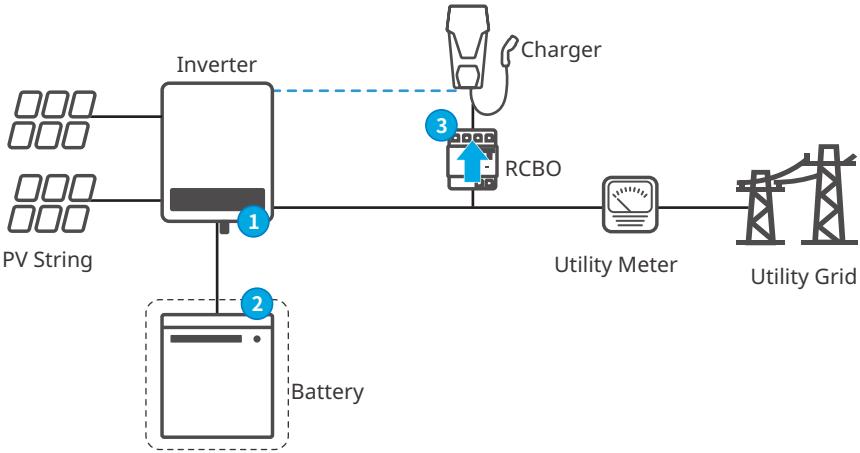

Step 1 Turn on the AC and DC switches on the inverter side.
Step 2 (Optional) Turn on the switches on the battery side.
Step 3 Turn on the RCBO.

7.3 Charging an EV

DANGER

- Do not move the EV during charging.
- Press the emergency stop button to disconnect the power supply once abnormality happens during the charging.
- Do not charge on thunder and rainy days. Make sure that the charging plug and EV charing port are dry if you have to charge.
- Keep children far away from the charger. Children are not allowed to use the charger.
- It is forbidden to charge EV when a fault has occurred or the cable is broken.

NOTICE

- Plug the charging plug into the EV charging port before starting charging.
- After finishing charging, disconnect the charging plug and put its cap back. Wrap the cable around the dummy socket or around the charger.
- If the EV does not support automatic charging, you need to re-plug the charging plug of the charger to restart charging if the charging has been interrupted:
  - for AUTO Start mode, re-plug the charging plug and charging will then restart;
  - for other modes, charging can be restarted by tapping the card or by APP staring.

7.3.1 Starting Charging via SolarGo or SEMS Portal App

SolarGo

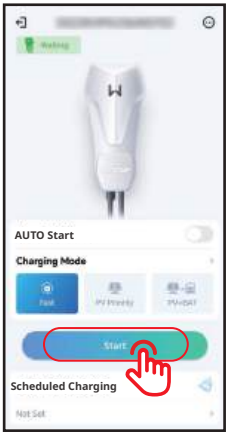

SEMS

7.3.2 Scheduling Charging via SolarGo or SEMS Portal App

SolarGo:

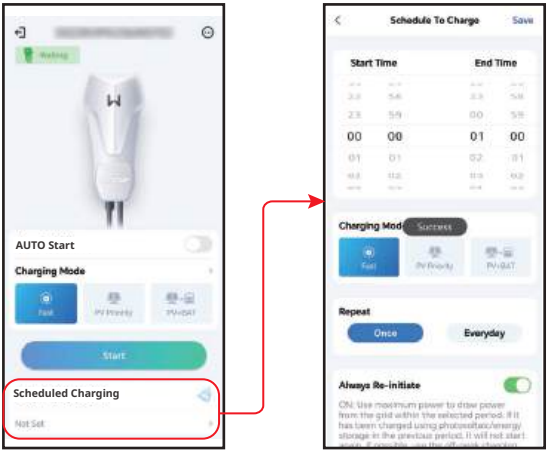

SEMS:

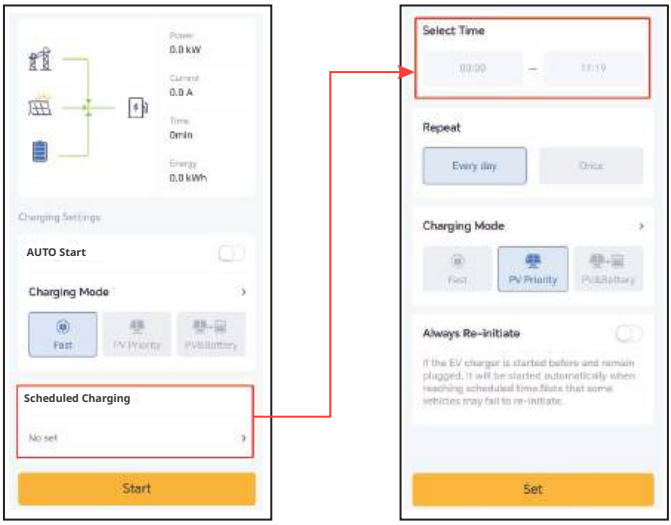

7.3.3 AUTO Start Mode

When the AUTO start mode is enabled, the car will start charging as soon as plugging in the charging plug, without the need of swiping a RFID card , provided that there is no scheduled charging set.

SolarGo

SEMS

7.3.4 RFID Card Charging

NOTICE
• The RFID card needs to be bound with the charger in advance. Please refer to the chapter 8.2.6 or 8.3.6 for binding steps. • The correct sequence is: plug the charging plug to the EV and then tap the card.

After swipe the card, the charger will start charging the EV.

8 System Commissioning

8.1 Indicator

Indicator	Color	Explanation
	Green ON	The charger is standby.
	Flash in Green	The system of the charger is upgrading.
	Blue ON	The charger is in charging.
	Red ON	A fault has occurred.
	Indicator light status when RFID card charging activating is abnormal	
	Red light on for 2s	Tap card before plugging the charging plug to the EV.
	Red light on flash twice	Charger and card does not match.

8.2 Setting and Checking Charger Information via SolarGo APP (Installers)

8.2.1 Downloading and Installing the App

Make sure that the mobile phone meets the following requirements:

- Mobile phone operating system: Android 4.3 or later, iOS 9.0 or later.
- The mobile phone can access the Internet.
- The mobile phone supports WLAN or Bluetooth.

Method 1: Search SolarGo in Google Play (Android) or App Store (iOS) to download and install the app.

SolarGo App

Method 2: Scan the QR code below to download and install the app.

SolarGo App

NOTICE
This document is based on the SolarGo of version 6.5.0. The content may differ depending on the SolarGo version.

8.2.2 Log in the Charger

NOTICE
• Log in using the initial password for the first time and change the password. To ensure account security, you are advised to change the password periodically and keep the new password in mind. • If the password has been incorrectly entered for 3 times, the account will be locked. You can contact GOODWE after-sales service to obtain the super password. After logging in, please change the login password.

Step 1 Ensure that the charger is power on and works properly.

Step 2 Select **Bluetooth** tab on the SolarGo app hompage.

Step 3 Pull down or tap **Search Device** to refresh the device list. Find the device by the the charger serial number. Tap the device name to log into the **Home** page.

Step 4(optional): For first connection with the equipment via Bluetooth, there will be a Bluetooth pairing prompt, tap **Pair** to continue the connection.

Step 5 Enter the login password to go to the homepage. Initial password: goodwe2022.

Step 6 Change the initial password.

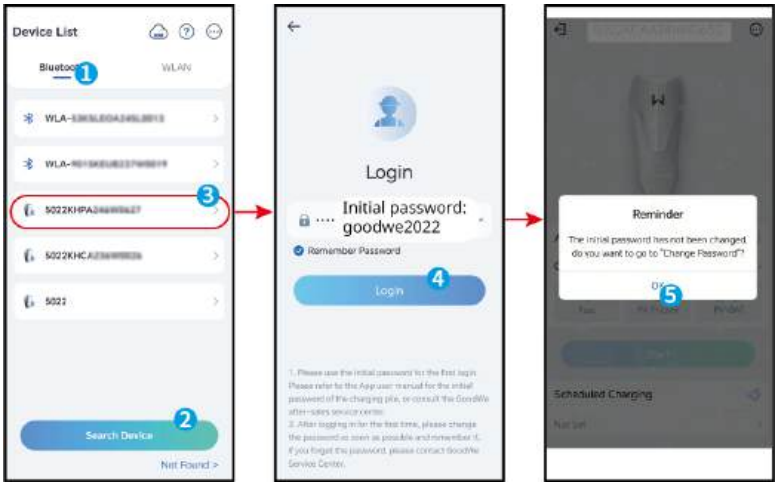

8.2.3 Introductions to the Main page

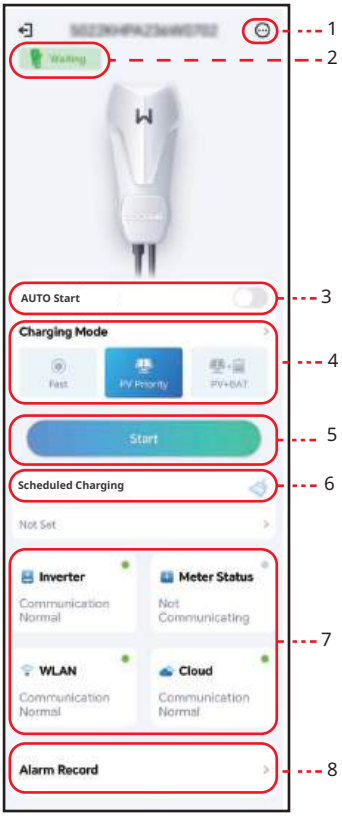

No.	Name/Icon	Description
1	More	Set the parameters of the charger. Such as **WiFi Configuration**, **Ensure Minimum Charging Power, etc**.
2	Device Status	Status of the charger, such as **Idle (plugged)**, **Charing**, etc..
3	AUTO Start	Start charging without tapping a card after plugging in the charging plug.
4	Charging Mode	Select the charging mode for EV.
5	Start/ End Charging	• Start Charging: Start charging the EV. • End Charging: Stop charging the EV.
6	Scheduled TCharg-ing	Set the single charging time or cycle charging time.
7	Communication Status	**Inverter:** whether the charger is communicating with the inverter. **Meter:**whether the charger is communicating with the meter. **WiFi**: whether the charger is communicating with the router. **Cloud**: whether the charger is communicating with the Cloud.
8	Alarm Record	Check alarms.

8.2.4 Configuring WiFi

Configure information of the router or switch which communicates with the charger to ensure communication between the charger and router or switch. Otherwise, the charger cannot connect to the server.

Step 1 Tap **More** > **Communication Setting** to configure the parameters.
Step 2 Tap **Network Name** and select the right network. Enter the**Password** of the selected network.
Step 3 Enable or disable **DHCP** based on actual needs.
Step 4 Configure **IP Address**, **Subnet Mask**, **Gateway Address,** and **DNS Server** according to the router or switch information when **DHCP** is disabled.
Step 5 Tap **Save** to complete the settings.

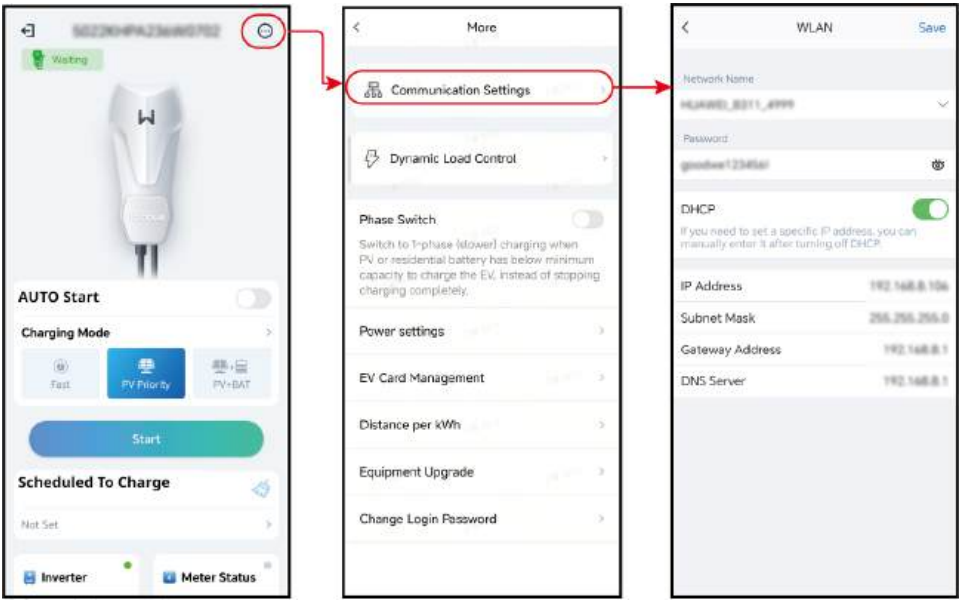

No.	Parameters	Description
1	Network Name	Select a network to establish communication between the charger and a router or a network switch. Then the charger can be connected to the Cloud.
2	Password	WiFi password for the actual connected network.
3	DHCP	• Enable DHCP when the router is in dynamic IP mode. • Disable DHCP when a switch is used or the router is in static IP mode.
4	IP Address	• Do not configure the parameters when DHCP is enabled. • Configure the parameters according to the router or switch information when DHCP is disabled.
5	Subnet Mask	
6	Gateway Address	
7	DNS Server	

8.2.5 Configuring Charging Mode

There are three charging modes: Fast, PV priority and PV+battery.

Fast

The charger uses electricity from power grid, PV, or batteries to charge electric vehicles. The output power of the charger defaults to the nominal output power of the charger, and users can set the output power which is no more than the nominal output power.

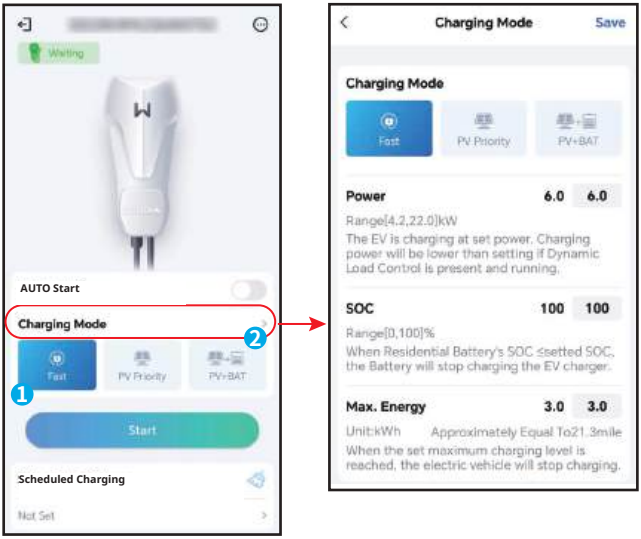

PV priority

Only the PV power is used to charge the EV. Loads which can be grid load or back-up load take priority in PV power consumption, the remaining power will charge the EV.

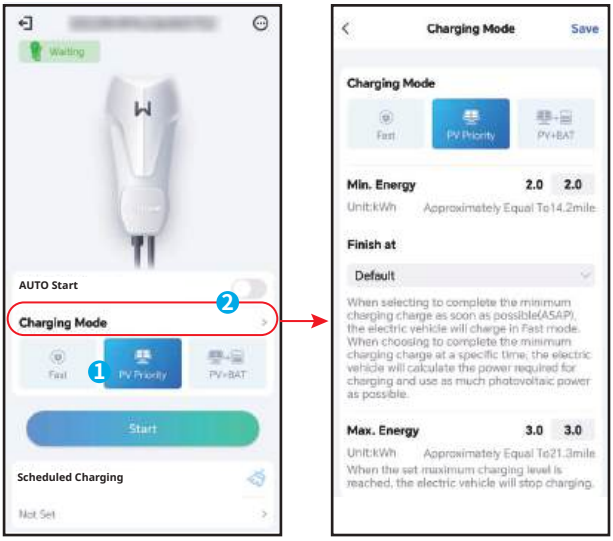

PV + Battery

The PV power and battery are used to charge the EV. Loads Loads which can be grid load or back-up load take priority in power consumption, the remaining power will charge the EV.

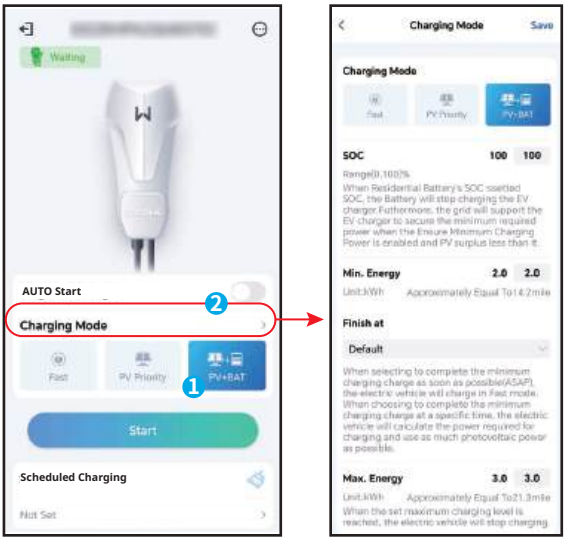

8.2.6 More

Dynamic Load Control

After you turn on the dynamic load control, the charger will balance the charging speed (or even pause charging) based on the obtained meter data and the set grid connection current to avoid tripping the main fuse. When the actual current purchased is close to the set grid connection current, in order to avoid tripping, the charger will reduce the charging power till pause charging. The charger will restart automatically after the difference between the set grid connection current and the current purchased from the grid meets the starting conditions of the charger.

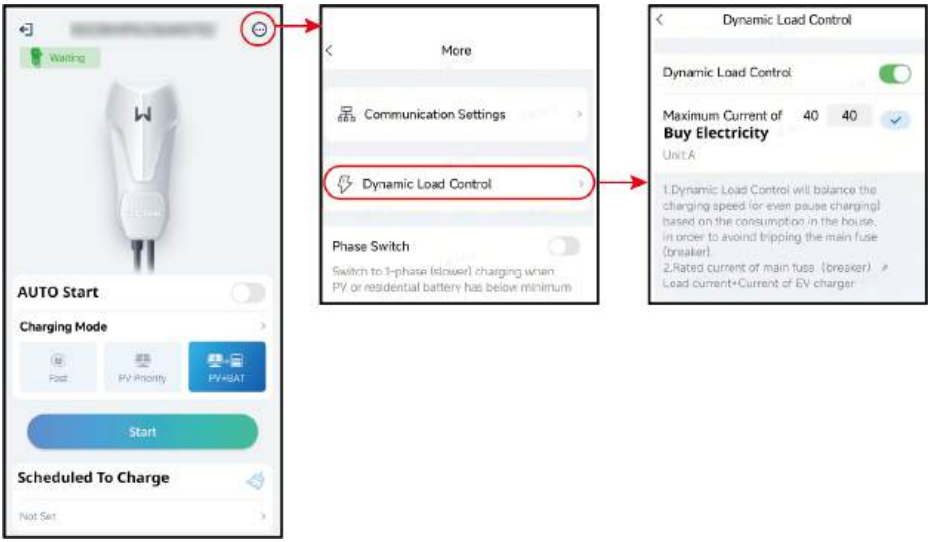

Phase Switch

NOTICE
Phase switch function is only available for three-phase charger.

Status	Explanation
On	When the total input power is lower than 4.2KW, the charger automatically switches to single-phase charging mode to avoid buying power from the grid or shutting down. The minimum charging power in single-phase charging mode is 1.4KW. (The phase switching time is about 3 minutes)
OFF	The charger remain three phase charging mode.

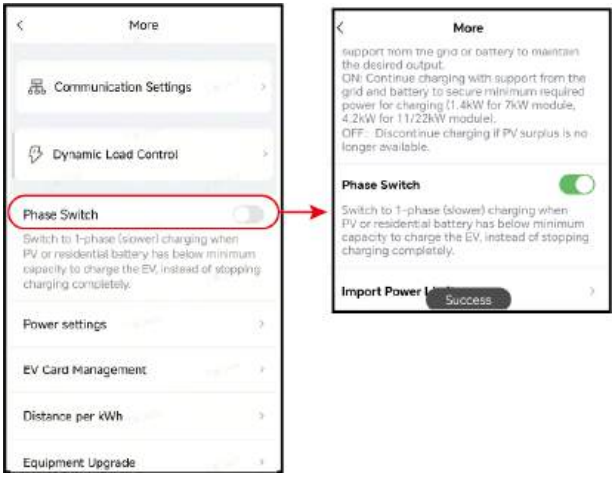

Power settings

Step: Tap **More** > **Power settings** to set the ralated parameters

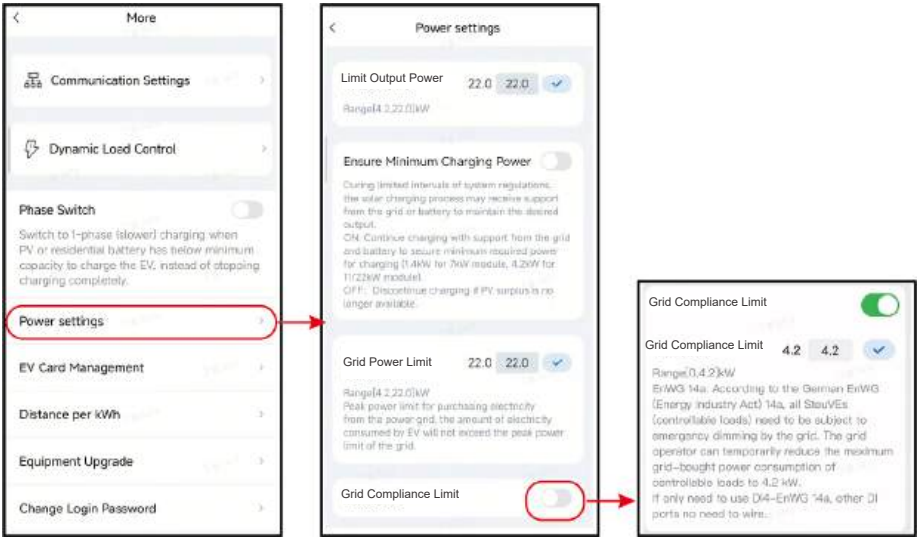

No.	Parameters	Descriptions
1	Limit Output Power	Set the charging power of the charging pile. If not set, the default charging power is the rated power.
2	Ensure Minimum Charging Power	During limited intervals of system regulations the solar charging process may receive support from the grid or battery to maintain the desired output. ON: Continue charging with support from the grid and battery to secure minimum required power for charging (1.4kW for 7kW module, 4.2kW for 11/22kW module). OFF: Discontinue charging if PV surplus is no longer available.
3	Grid Power Limit	Peak power limit for purchasing electricity from the power grid, the amount of electricity consumed by EV will not exceed the peak power limit of the grid.
4	Grid Compliance Limit	According to the German EnWG (Energy Industry Act) 14a, all SteuVEs (controllable loads) need to be subject to emergency dimming by the grid. The grid operator can temporarily reduce the maximum grid-bought power consumption of controllable loads to 4.2 kW. If only need to use DI4-EnWG 14a, other DI ports no need to wire.

EV Card Management

RFID cards can be added and deleted, and each charger can bound up to 10 cards.

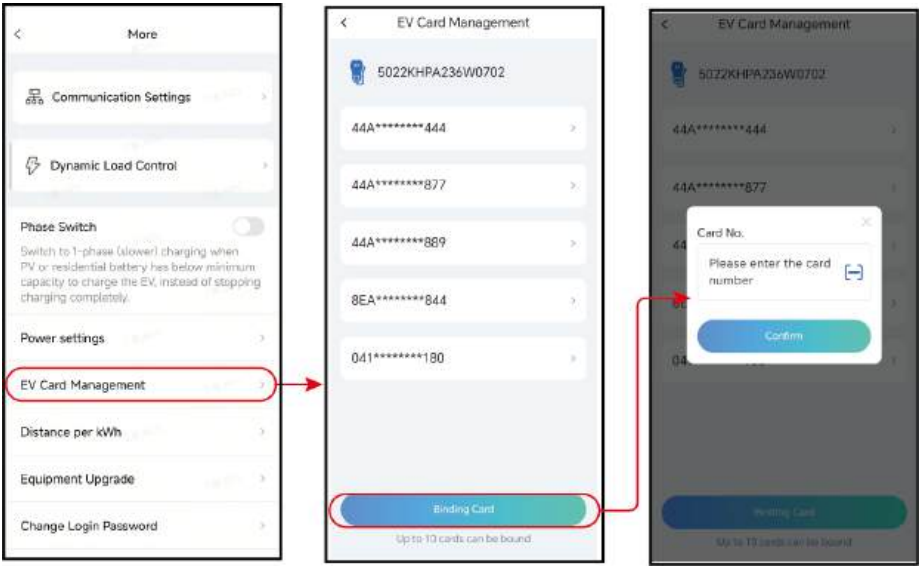

Distance per kWh

You can set the energy-mileage conversion ratio or remain the default setting.

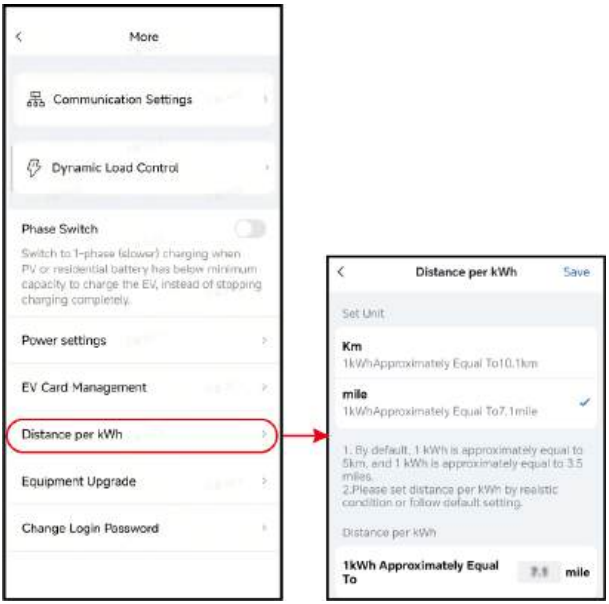

Equipment Upgrade

Step: Tap **More** > **Equipment Upgrade** to upgrade the EV charger.

Change Login Password

Step: Tap **More** > **Change Login Password** to change the password.

Restore Factory Defaults

NOTICE
After restoring factory defaults, the password will change back to the innitial password of goodwe2022.

Step: Tap **More** > **Restore Factory Defaults.**

8.3 Setting and Checking Charger Information via SEMS Portal APP (Installers)

8.3.1 Downloading and Installing the App

Requirement of Cell Phone:

- Operating system: 4.3 or above versions for Android; 9.0 or above versions for iOS.
- Able for Internet connection and online browsing.
- Support WLAN/Bluetooth connection.

Method 1 Search SEMS Portal in Google Play (Android) or App Store (iOS) to download and install;

Method 2 Scan below QR to download and install.

8.3.2 Register an End User Account

Tap **Register** and fill in the blanks for registration.

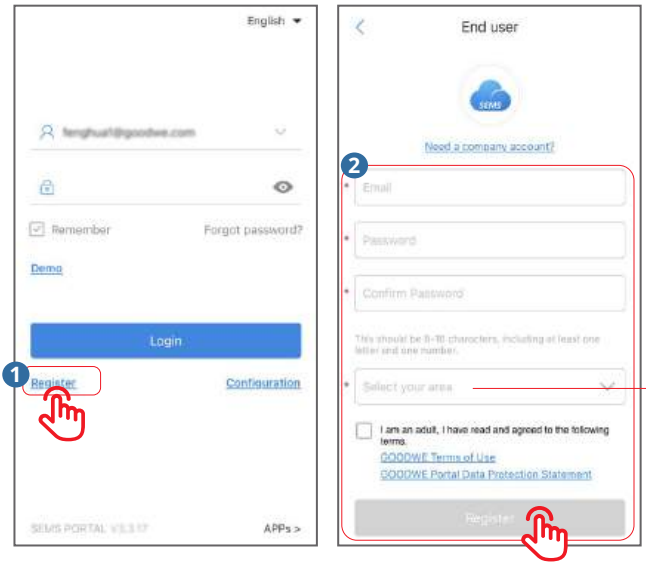

Note: Select **your area** based on where the plant locates. A wrong selection may cause plant creation failed.

8.3.3 App Login

NOTICE
Already obtained the account and password.

Type the account & password, tap **Login**, and enter into SEMS Portal App.

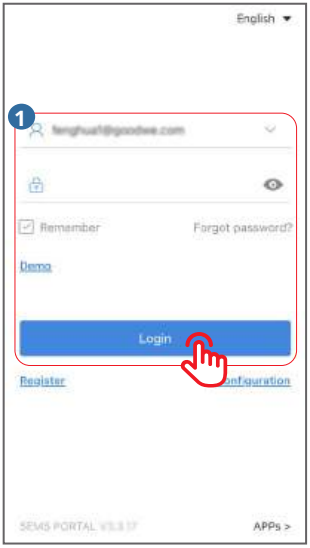

8.3.4 Creating Plant

Step 1 Follow below steps, and enter into the **Create Plant** page.
Step 2 Read the instructions, input the requested data, and tap **Submit**. (* refers to the mandatory items)
Step 3 Follow the instructions to add devices, and finish the creation. (Or tap **ADD** on the main page to add new devices.)

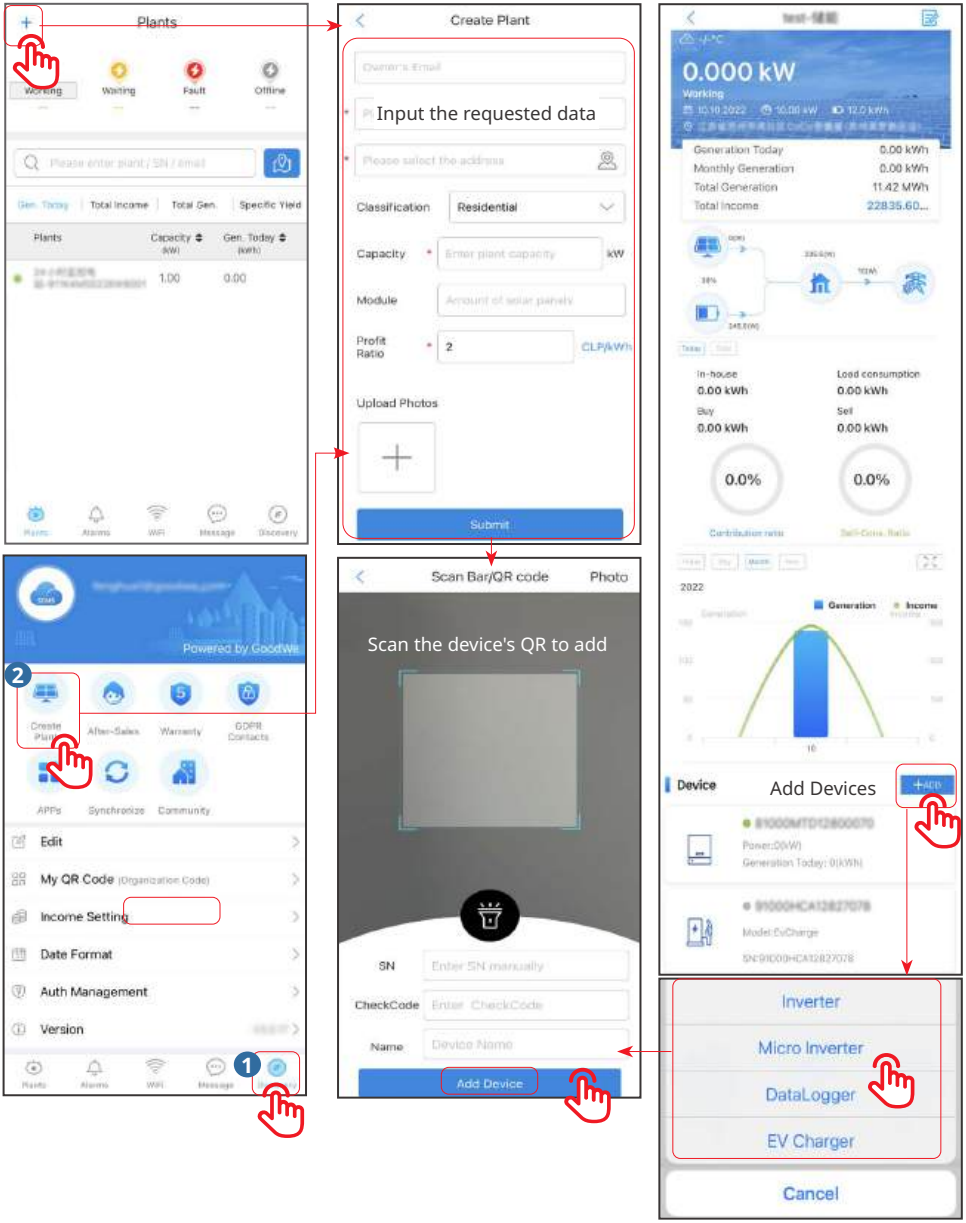

8.3.5 Configuring Charging Mode

There are three charging modes: Fast, PV priority and PV+battery.

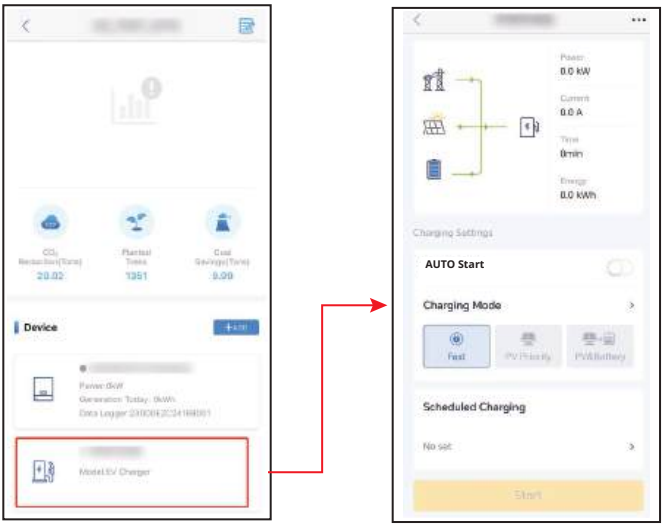

Fast

The charger uses electricity from power grid, PV, or batteries to charge electric vehicles. The output power of the charger defaults to the nominal output power of the charger, and users can customize the output power according to their actual needs (no more than the nominal output power).

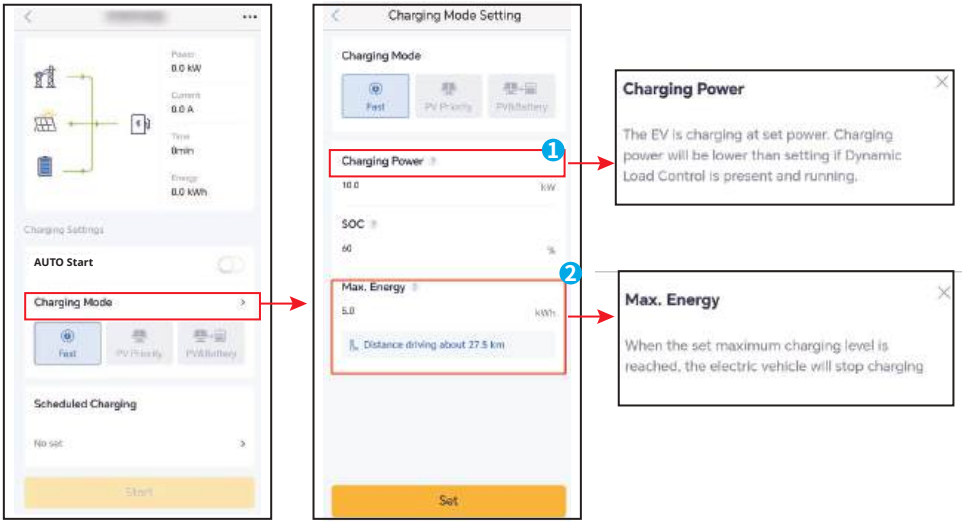

PV priority

Only the PV power is used to charge the EV. Loads take priority in PV power consumption, the remaining power will charge the EV.

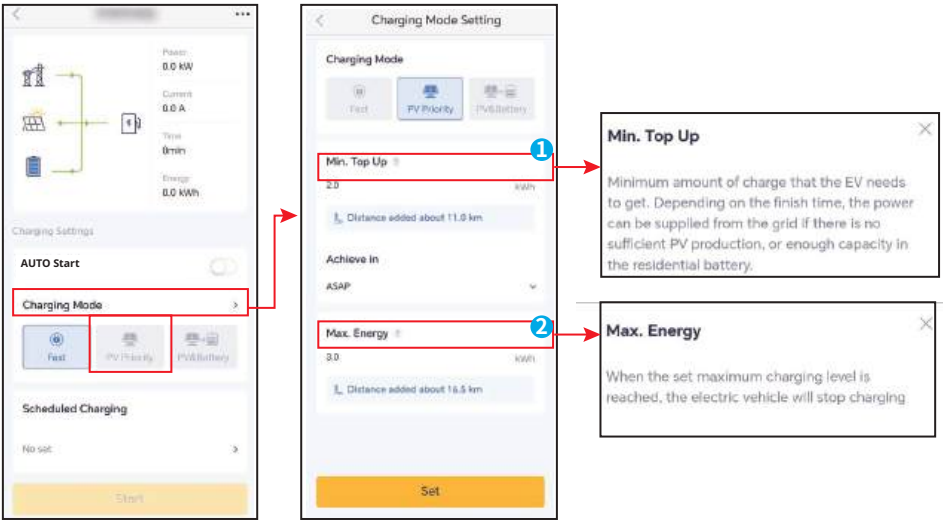

PV + Battery

The PV power and battery are used to charge the EV. Loads take priority in power consumption, the remaining power will charge the EV.

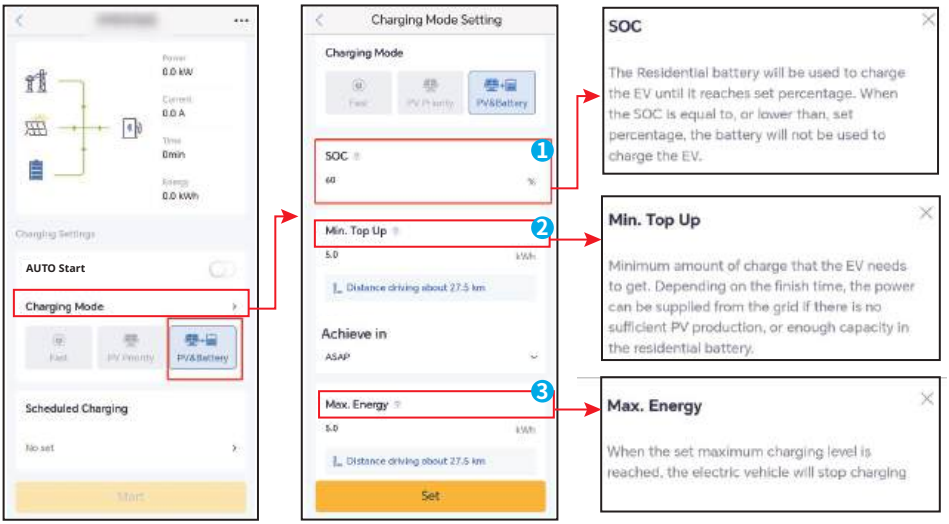

8.3.6 Setting

Dynamic Load Control

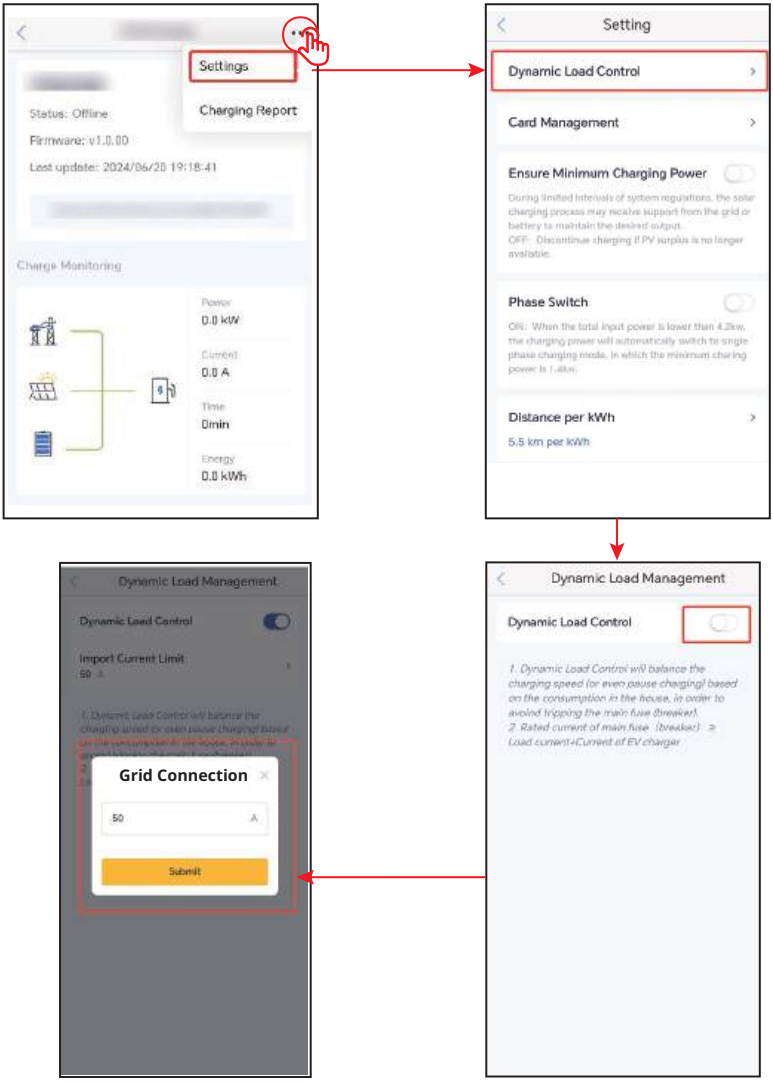

Ensure Minimum Charging Power

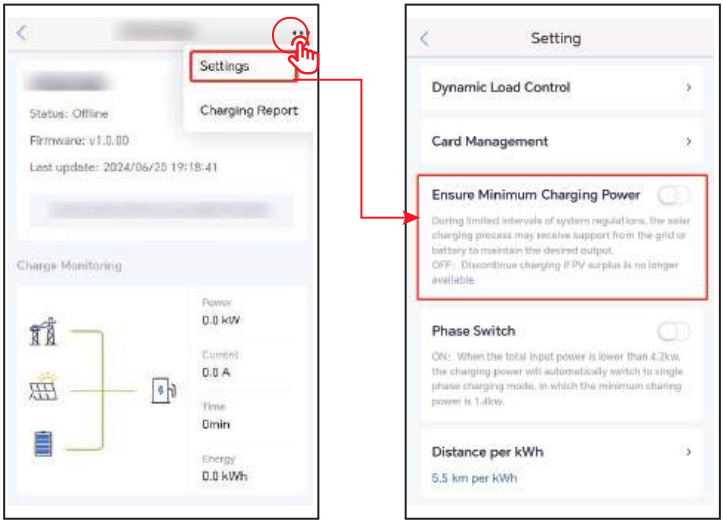

RFID Card Management

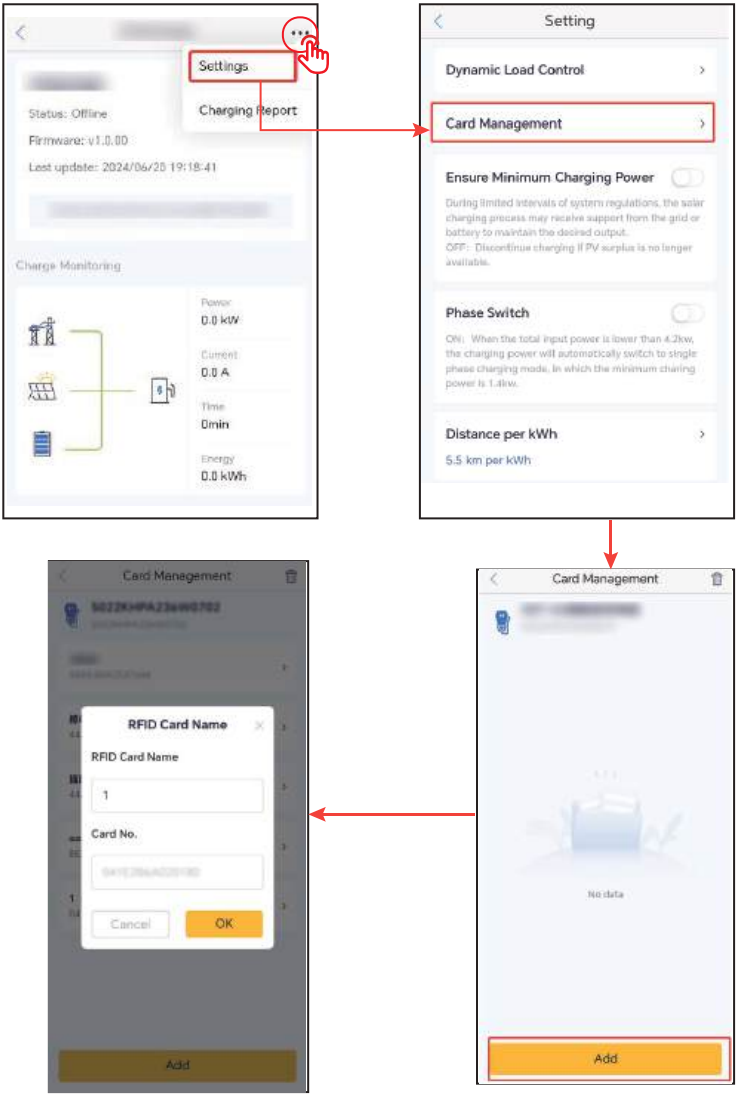

Phase Switch

NOTICE
Phase switch function is only available for three-phase charger.

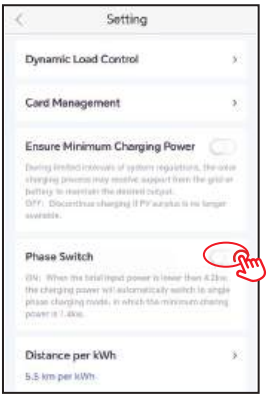

Distance per kWh

You can set the energy-mileage conversion ratio or remain the default setting.

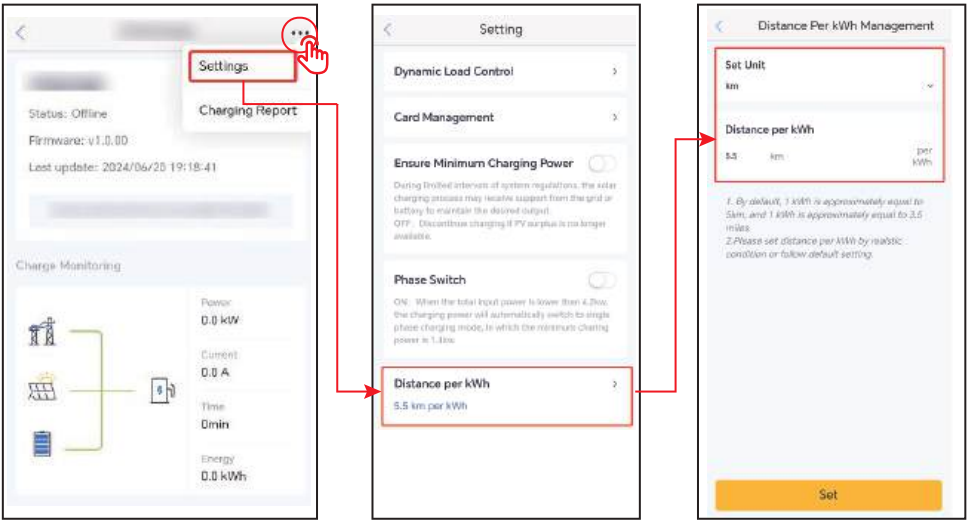

9 Maintenance

9.1 Power Off the Charger

DANGER

Power off the charger before operations and maintenance. Otherwise, the charger may be damaged or electric shocks may occur.

Disconnect the RCBO between the charger and the grid/inverter.

9.2 Dismantle the Charger

WARNING

- Make sure that the charger is powered off.
- Wear proper PPE before any operations.

Step 1 Disconnect all cables, including AC and communication cables.

Step 2 Remove the charger from the mounting plate.

Step 3 Remove the mounting plate.

Step 4 Store the charger properly. If the charger needs to be used later, ensure that the storage conditions meet the requirements.

9.3 Discard the Charger

If the charger cannot work anymore, dispose of it according to the local disposal requirements for electrical equipment waste. The charger cannot be disposed of together with household waste.

9.4 Routine Maintenance

Maintaining Item	Maintaining Method	Maintaining Period
Emergency Stop Button	Turn the EMS on and off for three consecutive times to make sure that it is working properly.	Once 6 months
Electrical Connection	Check whether the cables are securely connected. Check whether the cables are broken or whether there is any exposed copper core.	Once 6-12 months
Sealing	Check whether all the terminals and ports are properly sealed. Reseal the cable hole if it is not sealed or too big.	Once 6-12 months
RCBO leakage current protection switch	Press the leakage current protection switch to ensure that the RCBO can be disconnected normally. test monthly	Once a month

9.5 Troubleshooting

The charger shows in red when there is fault. Log into SEMS Portal App or PV Master App for detailed troubleshooting.
Perform troubleshooting according to the following methods. Contact the After Sales Service if these methods do not work.
Collect the information below before contacting the After Sales Service, so that the problems can be solved quickly.

1. Charger information like serial number, software version, installation date, fault time, fault frequency, etc.
2. Installation environment, including weather conditions, and so on. It is recommended to provide some photos and videos to assist in analyzing the problem.
3. Utility grid situation.

No.	Fault	Cause	Solutions
1	Gun Connection Failure	The charger is disconnected during charging.	Re-plug the charger.
2	Emergency Stop	The emergency stop button is being pressed.	Loosen the button.
3	Grounding Error	The AC input grounding cable is disconnected.	Check and re-connect the grounding cable.
4	Ambient Temperature	The temperature of the charger is more than 98 degree.	The trouble is removed after cooling, and the charger enters into Standby Status.
5	Overvoltage	The AC Input is overvoltage.	The trouble is removed after the voltage is normal, and the charger enters into Standby Status.
6	Under Voltage	The AC Input is undervoltage	
7	Overcurrent	The output connection is short-circuited or overcurrent.	The trouble is removed after the output is normal, and the charger enters into Standby Status.
8	Deviation Time Out	1. The battery of EV is fully charged . 2. The environmental temperature is too low and the battery is not able to be charged. 3. The connection of the charger is abnormal.	1. Check whether the battery charging is finished via softwares. 2. Start the EV for preheating about 5 minutes before charging it whenthe environment is too cold. 3. Check and unplug the charging connector,re-plug it about 15s later.

No.	Fault	Cause	Solutions
9	Preparing Time Out	The CP signal communication is unsuccessful.	1. Check if the EV is fully charged. 2. Replug the charging connector after unplugging it for about 15s, contact the dealer or After Sales Service if the problems can not be solved. Contact the dealer or the after-sales service if the problem is still exist.
10	Welded contactor Fault	The internal component is in fault.	Restart the charger. Contact the dealer or After Sales Service if the problems can not be solved.
11	Meter failure		
12	Leakage Current Fault		
13	Reading Error		
14	EEPROM error		
15	Flash error		
16	Leakage detector failure		

10 Technical Parameters

Technical Data	GW7K-HCA-20	GW11K-HCA-20	GW22K-HCA-20	
Input				
Nominal Input Voltage (V)	230*3, L/N/PE	400*3, 3L/N/PE	400*3, 3L/N/PE	
Nominal Input Current (A)	32	16	32	
Nominal AC Grid Frequency (Hz)	50/60	50/60	50/60	
Output				
Nominal Output Power (W)	7000	11000	22000	
Nominal Output Voltage (V)	230	400	400	
Nominal Output Current (A)	32	16	32	
Nominal Output Frequency (Hz)	50/60	50/60	50/60	
Protection				
Residual Current Protection	AC 30mA+ DC 6mA	AC 30mA+ DC 6mA	AC 30mA+ DC 6mA	
Overcurrent Protection	Integrated	Integrated	Integrated	
Overvoltage Protection	Integrated	Integrated	Integrated	
Over Temperature Protection	Integrated	Integrated	Integrated	
Ground Fault Protection	Integrated	Integrated	Integrated	
AC Surge Protection	Type III	Type III	Type III	
Emergency Power Off	Integrated	Integrated	Integrated	
General Data				
Operating Temperature Range (°C)	-30 ~ +50*1		-30 ~ +50*1	-30 ~ +50*1

Technical Data	GW7K-HCA-20	GW11K-HCA-20	GW22K-HCA-20	
Relative Humidity	5% ~ 95% (Non-condensing)		5% ~ 95% (Non-condensing)	5% ~ 95% (Non-condensing)
Max. Operating Altitude (m)	2000		2000	2000
Cooling Method	Natural Convection		Natural Convection	Natural Convection
User Interface	WLAN+APP, LED		WLAN+APP, LED	WLAN+APP, LED
Start method	APP, RFID, AUTO Start		APP, RFID, AUTO Start	APP, RFID, AUTO Start
Communication	Bluetooth, WiFi, RS485 (*2), LAN		Bluetooth, WiFi, RS485 (*2), LAN	Bluetooth, WiFi, RS485 (*2), LAN
Working Mode	Fast Charging PV Priority PV+BATT Scheduled Charging Dynamic Load Control		Fast Charging PV Priority PV+BATT Scheduled Charging Dynamic Load Control	Fast Charging PV Priority PV+BATT Scheduled Charging Dynamic Load Control
Weight (kg)	5.2(With 6m Cable) 5.6(With 7.5m Cable)	5.4(With 6m Cable) 5.6(With 7.5m Cable)	6.4(With 6m Cable) 7.1(With 7.5m Cable)	
Dimension (W×H×D) (mm)	208*450*170		208*450*170	208*450*170

Noise Emission (dB)	< 20	< 20	< 20
Standby Power(W)	< 6.5	< 6.5	< 6.5
Ingress Protection Rating	IP66*2	IP66*2	IP66*2
Output Cable & Connector	6m Cable (7.5m optional) IEC Type2	6m Cable (7.5m optional) IEC Type2	6m Cable (7.5m optional) IEC Type2
Accessories	RFID Card*2	RFID Card*2	RFID Card*2
Installation	Indoors or Outdoors	Indoors or Outdoors	Indoors or Outdoors
Communication Protocol	Modbus TCP	Modbus TCP	Modbus TCP
Protection	External Type A RCD is needed	External Type A RCD is needed	External Type A RCD is needed
MTBF (h)	100,000	100,000	100,000
Protection Class	I	I	I
Mounting Method	Wall/Floor (Optional Stand)	Wall/Floor (Optional Stand)	Wall/Floor (Optional Stand)
Certifications	IEC61851-1 IEC62311 IEC62955 AS/NZS 4268:2017 IEC61008-1	IEC61851-1 IEC62311 IEC62955 AS/NZS 4268:2017 IEC61008-1	IEC61851-1 IEC62311 IEC62955 AS/NZS 4268:2017 IEC61008-1
EMC	Class B	Class B	Class B
Country of Manufacture	China	China	China

*1: Operating Temperature Range (℃): Charger is -30~+55℃, and Charging Plug is 50℃

*2: Ingress Protection Rating: Charging Plug IEC type 2 is IP55

*3: For Brazil is: 220/380/380Vac

GoodWe Website

GoodWe Technologies Co., Ltd.

No. 90 Zijin Rd., New District, Suzhou, 215011, China

www.goodwe.com

service@goodwe.com

Local Contacts