PO II

- For protection of mains and appliances in industrial buildings, administration buildings, buildings of civil amenities, detached houses and flats against the overvoltage
- Decreases overvoltage and restricts overvoltage energy wave caused by induction and switching activities in the low-voltage power supply
- Installation: into the sub-distribution board
- Usage as the 2nd level (T2 , medium protection) in 3-level overvoltage protection concept
- Provides protection against the overvoltage for appliances placed in the sub-distribution board in the range of T2 ,T3 (medium, fine protection)
- High diverting capability provided by power varistors MOV and by gas filled spark gaps
- Version: basic part + plug-in protective modules
- Protective modules rotable with respect the base through180°
- Optical and remote signalization of operation state
- Optical signalization of wear state (EWS version)
- Zero leakage current (LCF version)
- Multifunctional terminals for conductors and bus bars

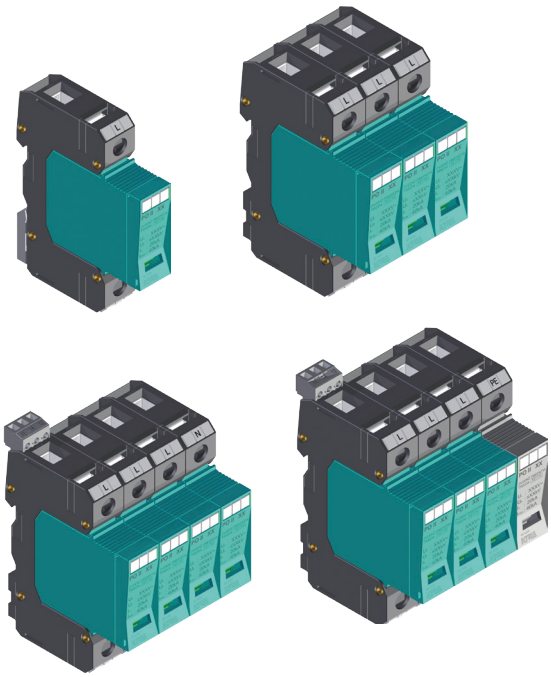

DIMENSIONS

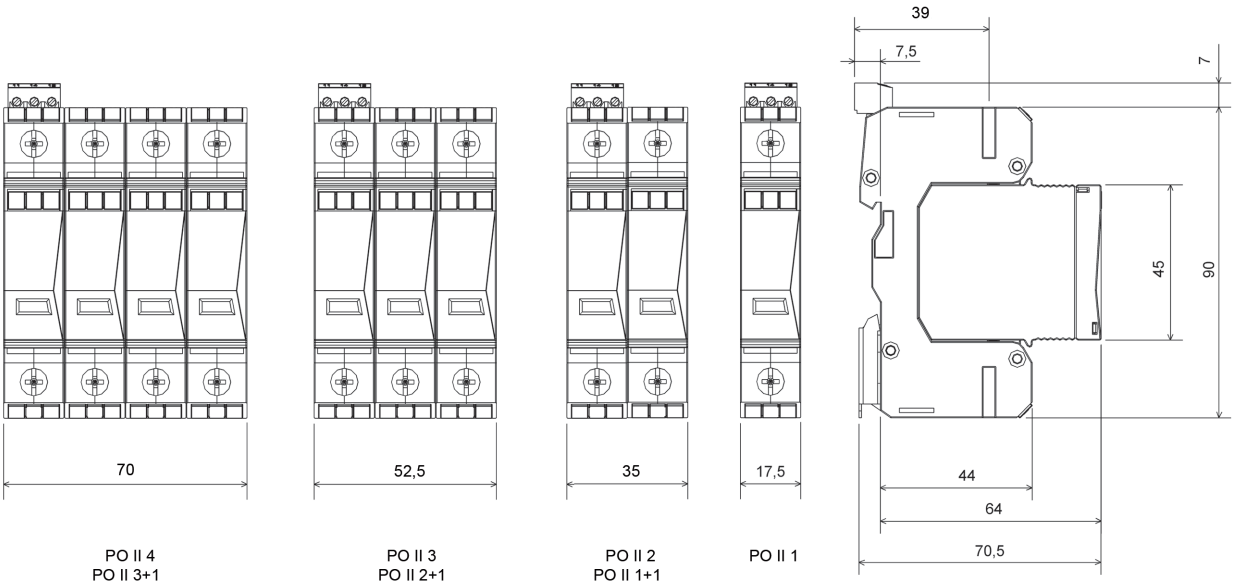

BASIC VERSION

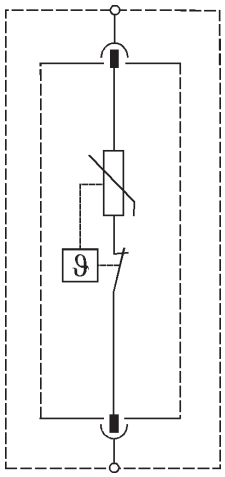

Signalling states:

green = OK

red = out of operation,
to be replaced immediately

EWS VERSION

Wear signalling states in EWS version:

green = OK

yellow = replacement is recommended

red = out of operation,
to be replaced immediately

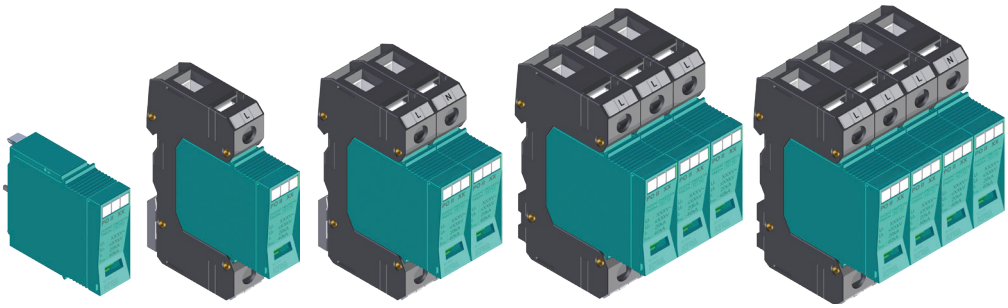

PO II 0 PO II 1 PO II 2 PO II 3 PO II 4

LCF VERSION

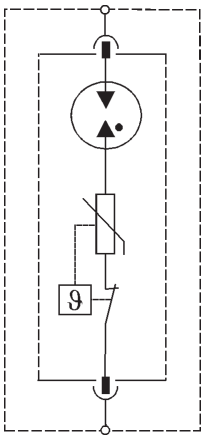

- LCF version is overvoltage protection with suppressed residual current
- The device can be connected in front of electricity meter
- Varistor is connected in series with gas filled spark gap

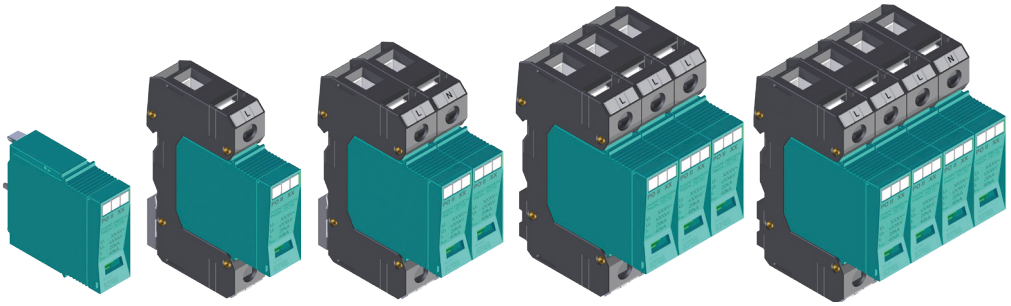

PO II 0 LCF PO II 1 LCF PO II 2 LCF PO II 3 LCF PO II 4 LCF

R and N-PE VERSION

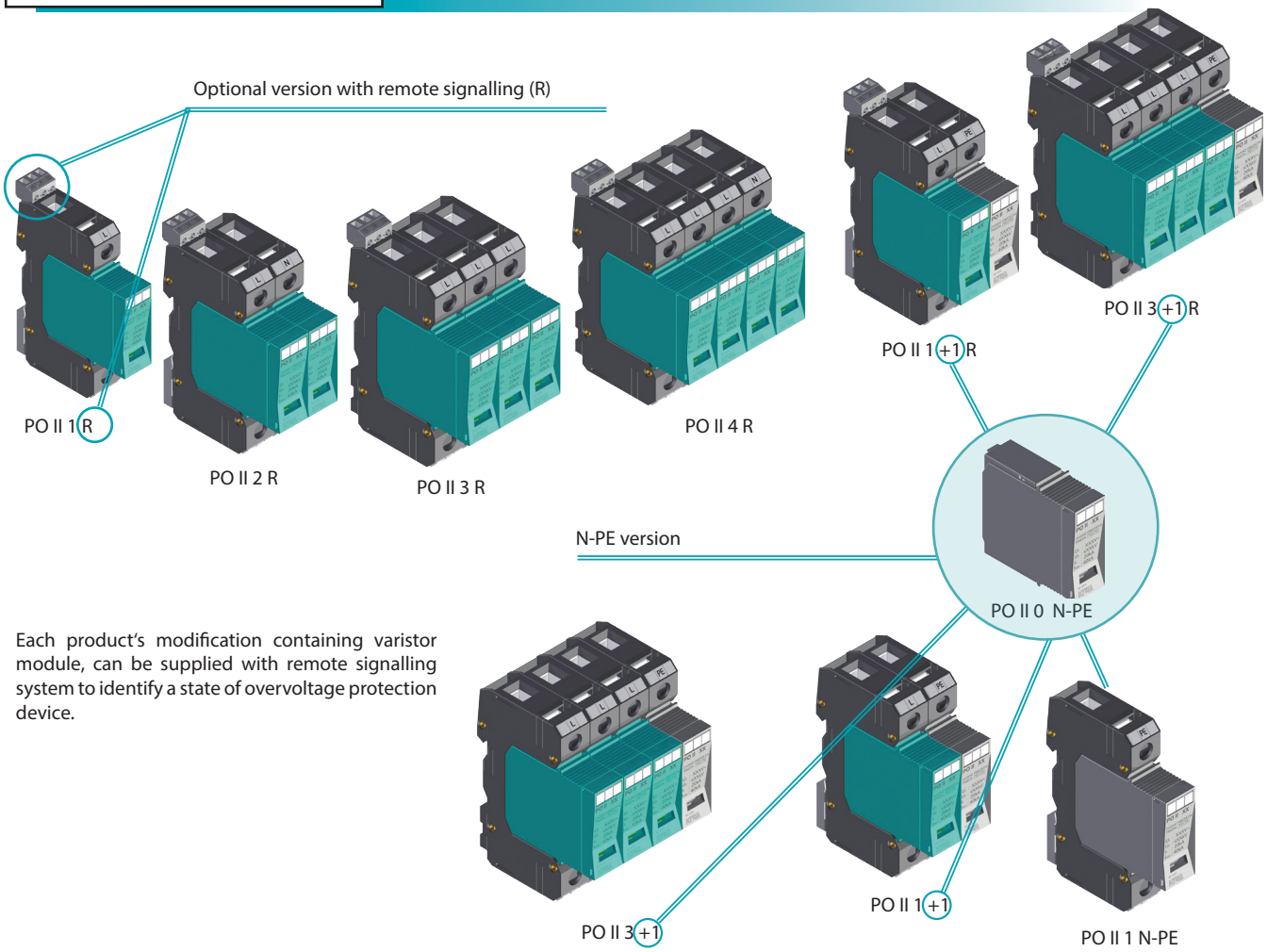

Each product's modification containing varistor module, can be supplied with remote signalling system to identify a state of overvoltage protection device.

INSTALLATION

- Installation on DIN rail
- Cable labeling system using Dekafix replaceable strips
- Plug-in varistor can be turned through 180°

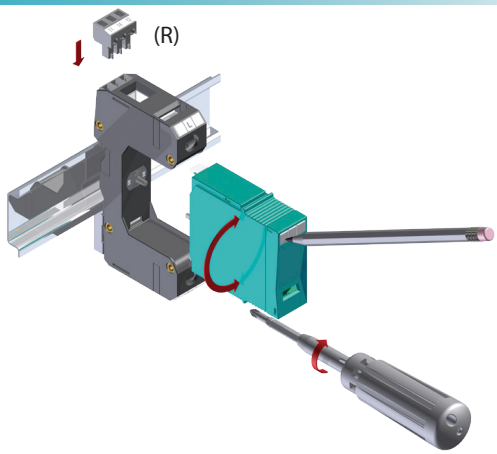

TECHNICAL PARAMETERS

KIWA TYPE		PO II					
		L-N					N-PE
		280 V	75 V	130 V	385 V	550 V	
Number of poles		1	1	1	1	1	1
Nominal voltage	U_n	230 V~	60 V~	120 V~	385 V~	470 V~	230 V~
Max. operating voltage T2 T3	U_c	280 V~	75 V~	130 V~	385 V~	550 V~	260 V~
Voltage protection level T2 T3	U_p	≤1,45 kV	≤0,7 kV	≤0,85 kV	≤1,8 kV	≤2,65 kV	≤1,45 kV
Response time	t_A	<25 ns					<150 ns
Open circuit voltage T3	U_{oc}	6 kV					
Nominal discharge current (8/20) T2	I_n	20 kA					
Max. discharge current (8/20)	I_{max}	40 kA					
Prospective short-circuit current of a power supply	I_p	25 kA_{ef}					-
Overcurrent protection gL/gG		≤ 125 A					-
Temporary overvoltage	U_{TOV}	335 V~	90 V~	175 V~	560 V~	685 V~	-
Residual current	I_{PE}	-					<1 µA
Follow current	I_f	-					100 A
Signalling changeover contact		M3/0.25 Nm, □ max. 1,5 mm^2, max. 250V~/1A					-
Status indication of TDD (Thermic Disconnecting Device)		green (OK)/red (OUT)					-
Status indication of EWS		green (OK)/yellow/red (OUT)					-
Min. ... max. tightening torque		2 ... 3 Nm					
Connecting conductor cross section	- wire	4 ... 35 mm^2					
	- cord	4 ... 25 mm^2					
Operating temperature range		- 40 ... +70 °C					
Degree of protection		IP 20					
Colour	- plug-in varistor	turquoise blue, RAL 5018					light grey, RAL 7035
	- holder	black; RAL 9011					black; RAL 9011
Dimensions		97 x 64 x 17,5 mm					
Mounting on profiled DIN rail		35 x 7,5 mm					
Products comply with norms STN EN 61643-11 IEC 61643-1 VDE 0675-06		typ 2 T2 + typ 3 T3 Class II + Class III Klasse C + Klasse D					

PRODUCT SPECIFICATION

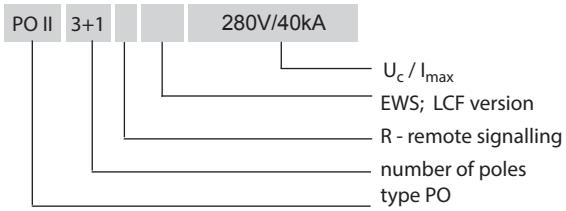

TYPE U_c	Order number				
	280 V AC	75 V AC	130 V AC	385 V AC	550 V AC
PO II 1	82.001	82.021	82.025	82.033	82.043
PO II 1 R	82.005	82.023	82.029	82.037	82.047
PO II 1 EWS	82.068				
PO II 1 R EWS	82.070				
PO II 1+1	82.017				
PO II 1+1 R	82.019				
PO II 1 LCF	82.064				
PO II 1 R LCF	82.066				
PO II 2	82.002	82.022	82.026	82.034	82.044
PO II 2 R	82.006	82.024	82.030	82.038	82.048
PO II 2 EWS	82.069				
PO II 2 R EWS	82.071				
PO II 2+1	82.062				82.051
PO II 2+1 R	82.063				82.052
PO II 2 LCF	82.065				
PO II 2 R LCF	82.067				

TYPE U_c	Order number				
	280 V AC	75 V AC	130 V AC	385 V AC	550 V AC
PO II 3	82.003		82.027	82.035	82.045
PO II 3 R	82.007		82.031	82.039	82.049
PO II 3 EWS	82.013				
PO II 3 R EWS	82.015				
PO II 3+1	82.018			82.041	
PO II 3+1 R	82.020			82.042	
PO II 3 LCF	82.009				
PO II 3 R LCF	82.011				
PO II 4	82.004		82.028	82.036	82.046
PO II 4 R	82.008		82.032	82.040	82.050
PO II 4 EWS	82.014				
PO II 4 R EWS	82.016				
PO II 4 LCF	82.010				
PO II 4 R LCF	82.012				
PO II 0	82.053	82.056	82.057	82.058	82.059
PO II 0 LCF	82.054				
PO II 0 EWS	82.055				

TYPE U_c	Order number
	260 V AC
PO II 0 N-PE	82.060
PO II 1 N-PE	82.061