GROWATT

NEO 600M-X
NEO 800M-X
NEO 1000M-X

Installation & Operation Manual

Important Notice

Copyright © 2023 Shenzhen Growatt New Energy Co., Ltd. All rights reserved.
No part of this document may be reproduced, stored in a retrieval system, or transmitted, in any form or by any means, electronic, mechanical, photographic, magnetic or otherwise, without the prior written permission of Shenzhen Growatt New Energy Co., Ltd.

Shenzhen Growatt New Energy Co., Ltd. (hereinafter referred to as Growatt) makes no representations, express or implied, with respect to this documentation or any of the equipment and/or software it may describe, including (with no limitation) any implied warranties of utility, merchantability, or fitness for any particular purpose. All such warranties are expressly disclaimed. Neither Growatt nor its distributors or dealers shall be liable for any indirect, incidental, or consequential damages under any circumstances.

(The exclusion of implied warranties may not apply in all cases under some statutes, and thus the above exclusion may not apply.)

The content of this manual is constantly reviewed and subject to change without notice. Every attempt has been made to make this document complete, accurate and up-to-date. Readers are cautioned, however, that Growatt reserves the right to make changes without notice and shall not be responsible for any damages, including indirect, incidental or consequential damages, caused by reliance on the material presented, including, but not limited to, omissions, typographical errors, arithmetical errors or listing errors in the content material.

This manual will be updated frequently, please refer to Growatt website at www.ginverter.com for the latest version.

All trademarks are recognized even if these are not marked separately. Missing designations do not mean that a product or brand is not a registered trademark.

Contents

1 Notes on this manual

1.1 Introduction
1.2 Target Group
1.3 Additional information
1.4 Symbols in this document
1.5 Radio Interference Statement

2 Safety

2.1 Intended Use
2.2 Installation personnel requirements and Grid connection approval
2.3 Safety instructions
2.4 Installation Warnings
2.5 Electrical Connection Warnings
2.6 Operation Warnings

3 Product description

3.1 Overview
3.2 Nameplate
3.3 Dimensions and weight
3.4 Highlights

4 Microinverter Installation

4.1 Safety instructions
4.2 Decisive Voltage Class (DVC) indicated for ports
4.3 Microinverter System
4.4 Accessories
4.5 Installation Steps

5 Troubleshooting

5.1 Error Message
5.2 System fault
5.3 Inverter fault
5.4 LED Indicator Status
5.5 Microinverter Replacement

6 Warranty

7 Decommissioning

7.1 Removing the Microinverter
7.2 Packing the Microinverter
7.3 Storage and Transportation
7.4 Disposal

8 Technical Data

8.1 Specification
8.2 DC connector info
8.3 Torque

9 Contact

1 Notes on this manual

1.1 Introduction

This manual describes the assembly, installation, troubleshooting and maintenance of the following microinverters manufactured by Shenzhen Growatt New Energy Co.,Ltd. (hereinafter referred to as Growatt):
NEO 600M-X
NEO 800M-X
NEO 1000M-X

1.2 Target Group

This manual is intended for qualified personnel. Qualified personnel should have received training and have demonstrated skills and knowledge in the construction and operation of this device. Qualified personnel are trained to deal with the dangers and hazards involved in installing electrical devices.

1.3 Additional information

Find further information on special topics in the download area at www.ginverter.com
The manual and other documents must be stored in a convenient place and be available at all times. We assume no liability for any damage caused by failure to observe instructions specified in this document. For possible changes in this manual, Growatt accepts no responsibilities to inform the users.

1.4 Symbols in this document

1.4.1 Warning symbols in this document

The warning symbols warn against improper operations, which may cause personal injury or device damage. Prior to installing and operating the NEO microinverter, please familiarize yourself with the symbols and their meanings.

Symbol	Meaning
DANGER	DANGER indicates a hazardous situation which, if not avoided, will result in death or serious injury.ation which, if not avoided, will result in death or serious injury.
WARNING	WARNING indicates a hazardous situation which, if not avoided, could result in death or serious injury.
CAUTION	CAUTION indicates a hazardous situation which, if not avoided, could result in minor or moderate injury.
NOTICE	NOTICE is used to address practices not related to personal injury.

1.4.2 Markings on this product

Label	Description
	Beware High Voltage
	Risk of fire or explosion
	Risk of burns
5min	Residual voltage exists after the microinverter is powered off. Wait for 5 minutes before performing any operation
	Point of connection for grounding protection
	Direct Current (DC)
	Alternating Current (AC)
	Refer to the manual
CE	CE marking This product complies with the requirements of the applicable EU directives.
	The inverter must not be disposed of with the household waste.

1.5 Radio Interference Statement

Growatt Microinverters have been tested and found to comply with the CE EMC directives, designed to protect against harmful interference in a residential installation. However, if not properly installed and used in accordance with the manual, the microinverter may cause harmful interference to radio communications, which can be determined by turning the equipment off and on. If the microinverter does cause harmful interference to radio or television reception, you can try to correct the interference by the following measures:

A. Reorient or relocate the receiving antenna of the sensitive device.

B. Connect the equipment to an outlet different from that to which the sensitive devices are connected.

If the problem persists, please consult Growatt customer service and support.

2 Safety

2.1 Intended Use

The NEO Microinverter converts the DC power generated by the photovoltaic (PV) modules to the single-phase and grid-compliant AC power and feed the energy to the grid.

Principle of a PV plant with the NEO single-phase Microinverter

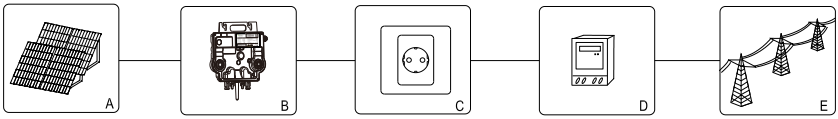

Position	Description
A	PV modules
B	Microinverter
C	Socket matched with the AC adapter cable
D	Energy meter
E	Utility grid

The NEO Microinverter should be operated with a permanent connection to the public grid. It is not intended for mobile use. Any use of the product other than that described in the Intended Use section does not qualify as appropriate. Damages caused by improper use are beyond the scope of warranty and should be the responsibility of the user.

2.2 Installation personnel requirements and Grid connection approval

Only qualified and well-trained personnel are permitted to install the NEO Microinverter. Prior to installing the equipment, ensure that it is permitted by the local authority. The NEO Microinverter can only operate when it is properly connected to the grid. Before connecting it to the public grid, ensure that you have consulted the responsible grid operator and obtain any approval needed.

2.3 Safety instructions

The NEO Microinverter is designed and tested according to international safety requirements. As with all electrical devices, there are residual risks despite careful construction. Improper use may cause fatal hazards to the operator, device damages and property loss. Therefore, it is essential to read through the instruction manual carefully while also ensuring compliance with the safety instructions during use. Should you encounter any problems, please contact Growatt support at +86-755-2951 5888.

2.4 Installation Warnings

WARNING	➢ Prior to installation, check if there is any damage caused during transportation or handling, which might affect the insulation integrity and the safety performance. Failure to do so may lead to personal injury and device damage. ➢ Unauthorized removal of necessary protection devices, improper use, incorrect installation and operation may lead to serious safety hazards and/or equipment damage. ➢ In order to minimize the potential of a shock hazard due to high voltages, cover the entire solar module with dark material before connecting it to any equipment.
CAUTION	➢ Ground the microinverter and the PV module bracket in compliance with local requirements to avoid personal injury and device damage.

2.5 Electrical Connection Warnings

DANGER	➢ High voltages are present in the conductive components of the product. Touching live parts could result in death or lethal injuries due to electric shock. • Do not remove the cover of the microinverter. • Only professional electricians are permitted to install, repair and replace the equipment. • Do not touch damaged microinverters. ➢ Danger to life due to high voltages in the microinverter • Residual voltage exists after the microinverter is powered off. Wait for 5 minutes before performing any operation. ➢ Persons with limited physical or mental abilities may only work with the Growatt microinverter following proper instructions and under constant supervision. ➢ Ensure that the microinverter is inaccessible to children.
WARNING	➢ Perform all electrical connections (e.g. conductor termination, PE connection, etc.) in accordance with locally applicable regulations. When working with the inverter powered on, adhere to all prevailing safety regulations to minimize the risk of accidents. ➢ Solar systems with inverters typically require additional control (e.g., switches, disconnects) or protective devices (e.g., fuse, circuit breakers) depending upon the prevailing safety rules.

2.6 Operation Warnings

WARNING	➢ Ensure all connectors are sealed and secured during operation. ➢ Some surfaces of the microinverter may become hot during operation. To reduce the risk of injury, do not touch the product while it is in operation. ➢ If an incorrect number of PV modules are connected in parallel, it might cause high PV voltage, damaging the device. ➢ Disconnect the device from the AC power source before disconnecting the PV module.
CAUTION	➢ All operations regarding transportation, installation, commissioning and maintenance must be operated by qualified and well-trained personnel and in compliance with all prevailing codes and regulations. ➢ Once the microinverter is disconnected from the grid, operate with extreme caution as some components may retain charge which might cause an electric shock. ➢ In special cases, interference may occur in a particular installation despite adhering to standardized emission limits. For example, when the sensitive equipment is located at the setup location or when the setup location is near radio or television receivers. In this case, the operator is obliged to take proper action to clear the interference. ➢ Keep a safe distance of at least 20 cm from the inverter at all times.

Product description 3

3.1 Overview

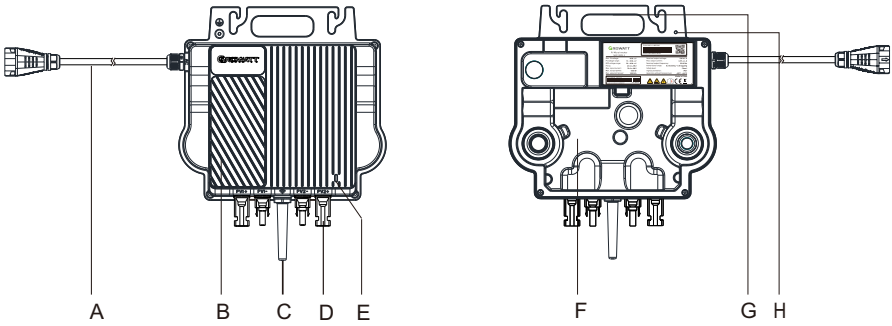

Position	Description
A	AC cable
B	Heat sink
C	Antenna
D	PV terminal
E	LED
F	Back plate
G	Handle
H	Grounding hole

3.2 Nameplate

The nameplate provides a unique identification of the microinverter, including the model of the product and the device-specific characteristics.

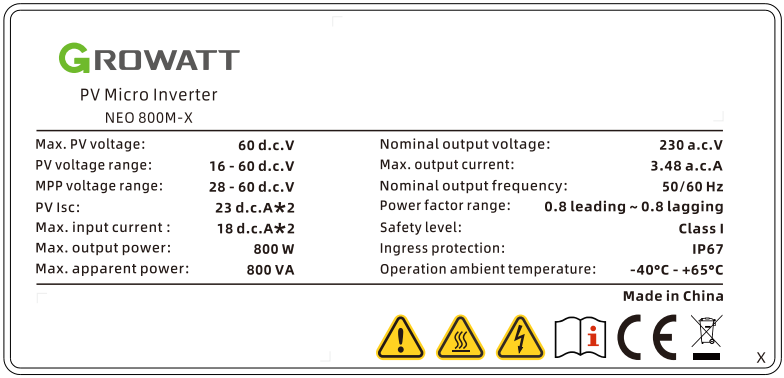

3.3 Dimensions and weight

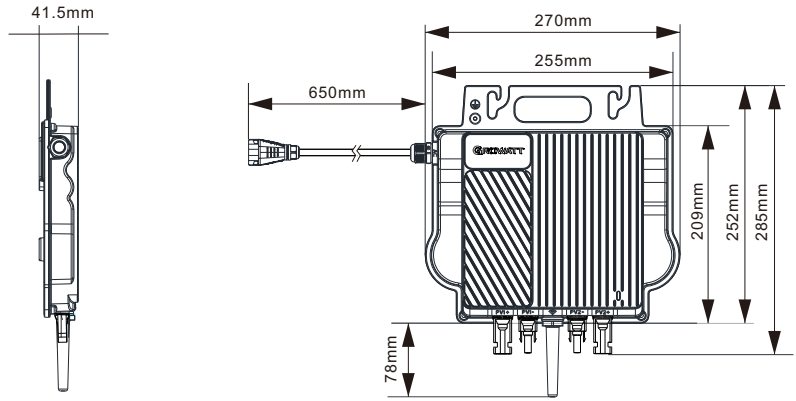

Dimensions and weight

Model	Width (H)	Height (W)	Depth (D)	Weight
NEO 600-1000M-X	270 mm	252 mm	41.5 mm	3.1 kg

3.4 Highlights

- Peak output power up to 1000 W
- Wide input voltage range:16--60Vdc
- 1-2 independent MPP trackers
- IP67 (NEMA 6) enclosure

Microinverter Installation 4

4.1 Safety instructions

	Danger to life due to lethal voltages! High voltages which may cause electric shocks are present in the conductive parts of the microinverter. Prior to performing any operations on the microinverter, disconnect the device from all power sources.
	Danger to life due to fire or explosion ➢ Do not install or use in potentially flammable and explosive atmospheres. ➢ Do not allow terminator to come in contact with open flame.
	Risk of burns due to hot enclosure parts The microinverter should be protected against accidental contact.
	Electromagnetic Radiation ➢ In special cases, interference may occur in a particular installation despite adhering to standardized emission limits. For example, when the sensitive equipment is located at the setup location or when the setup location is near radio or television receivers. In this case, the operator is obliged to take proper action to clear the interference. ➢ Never install the inverter near sensitive devices, such as the radio, the telephone and the television. ➢ Keep a safe distance of at least 20 cm from the microinverter at all times. ➢ Growatt assumes no responsibility for compliance to EMC regulations for the entire system

4.2 Decisive Voltage Class (DVC) indicated for ports

Port Name	Class
AC	C
DC	C

4.3 Microinverter System

The following diagram shows a solar system which consists of three key components:
GROWATT NEO Microinverter
WiFi Router
GROWATT monitoring system (ShinePhone APP/ShineServer Webpage).

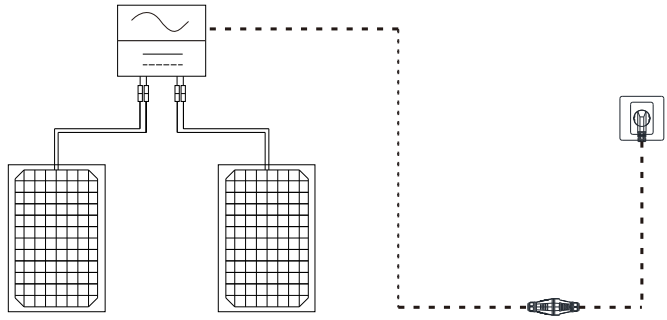

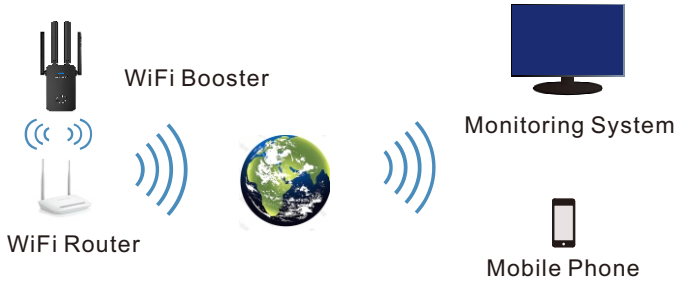

NOTICE	The NEO Microinverter supports WiFi communication. In case of weak WiFi signal, please install a WiFi Booster.

4.4 Accessories

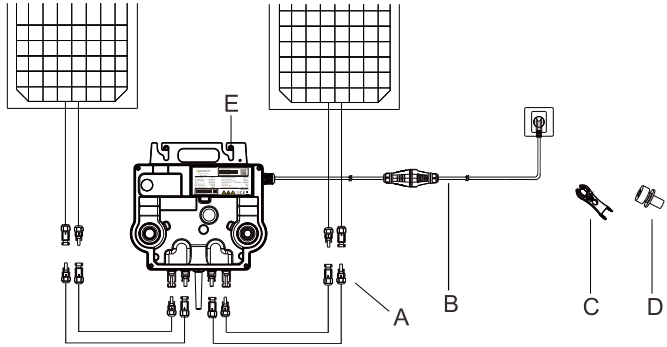

Position	Description
A	PV Extension Cable (Prepared by the installer)
B	AC Adapter Cable (Prepared by the installer)
C	AC Cable Disconnect Tool
D	Grounding screw (M4*6)
E	Mounting screw (M8*22)

4.5 Installation Steps

WARNING	The solar module connected to the inverter must conform to the Class A requirements of the IEC 61730 standard. ➢ Please use male and female PV connectors of the same brand.
WARNING	**Danger to life due to lethal voltages!** ➢ The PV module generates voltage when exposed to sunlight, which might cause personal injury. Therefore, cover the entire solar module with dark material prior to connecting it to the microinverter and ensure that AC adapter cable is disconnected. ➢ NEVER connect or disconnect the DC connector under load. ➢ Make sure the open-circuit voltage (Voc) of each PV module is less than the maximum input voltage of the inverter. ➢ The Maximum open-circuit voltage, which can occur when the temperature of the solar panel is -40℃, must not exceed the Maximum input voltage of the inverter.
WARNING	Improper operation during the wiring process can cause fatal injury to operator or unrecoverable damage to the inverter. Only qualified personnel can perform the wiring work. ➢ Ensure the correct polarity before connecting the PV modules and make sure that the maximum input voltage of the inverter is not exceeded.
NOTICE	Growatt recommends the use of a type-A RCD breaker with a rated residual current over 100mA.
NOTICE	The sequence can be changed based on your installation plan.

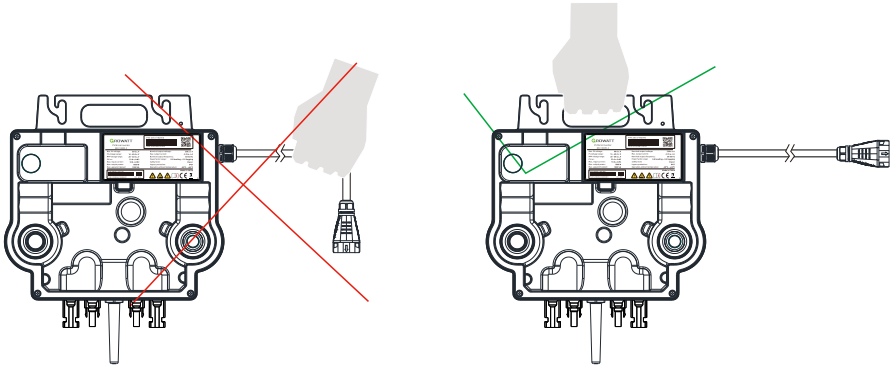

WARNING	Do not carry the NEO Microinverter by holding the cable. Please hold the handle instead.

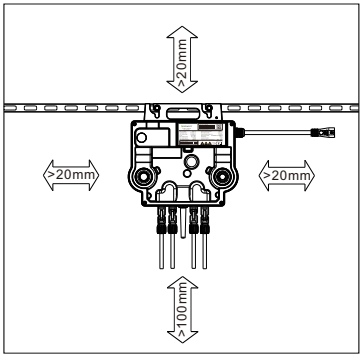

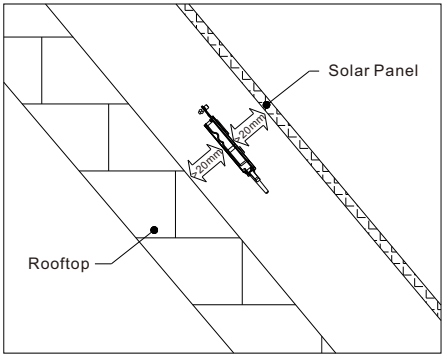

NOTICE	Reserve a clearance of at least 20 mm around the Microinverter to ensure sufficient space for ventilation and heat dissipation.

Step 1 Install the NEO Microinverter

a) Mount the NEO Microinverter to the rail using accessories recommended by your module racking vendor.

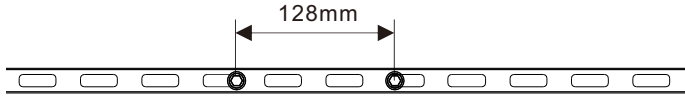

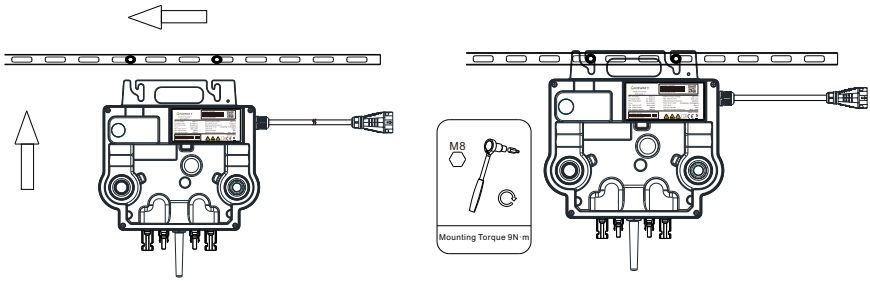

Step 2 Ground the system

a) The AC cable has an embedded earth wire, which might be sufficient to ensure proper grounding.
b) In area with special grounding requirements, external grounding maybe needed by grounding the screw hole on the handle.

Step 3. Connect the PV Module

NOTICE	If the DC cable is too short for installation, use the DC extension cable to connect the PV module to the NEO Microinverter; otherwise the PV terminals will be damaged. The total length of the PV cable must not exceed 5 m. It's forbidden to connect the positive PV terminal and the negative PV terminal of one module into two different input channels. It is recommended to use the PV1-F cable.
NOTICE	The NEO Microinverter (including DC and AC connectors) should avoid direct expose to the sunlight, rain or snow. Do not place the microinverter in gap between PV modules. Maintain a minimum clearance of 20 mm between the roof and the back plate of the device to allow proper air flow. The rack must be properly grounded.

a. Mount the NEO Microinverter below the PV modules.
b. Connect the DC cables of PV modules to the DC input of the Microinverter.

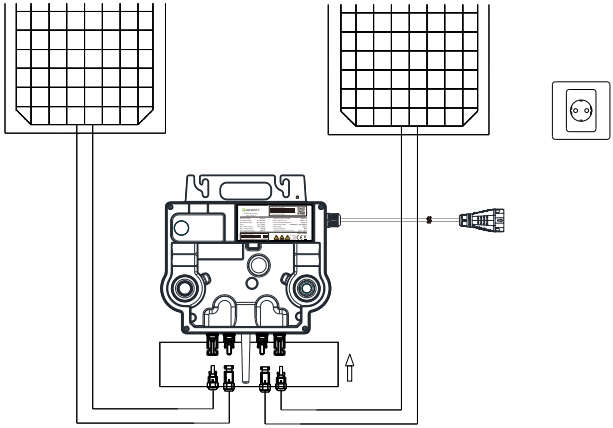

Step 4 Connect the Microinverter and AC adapter cable

a) Connect the AC cable with the AC adapter cable. Make sure that you hear a click sound as proof of a robust connection.

b) Plug the AC adapter cable to the socket to wire it to the local grid network.

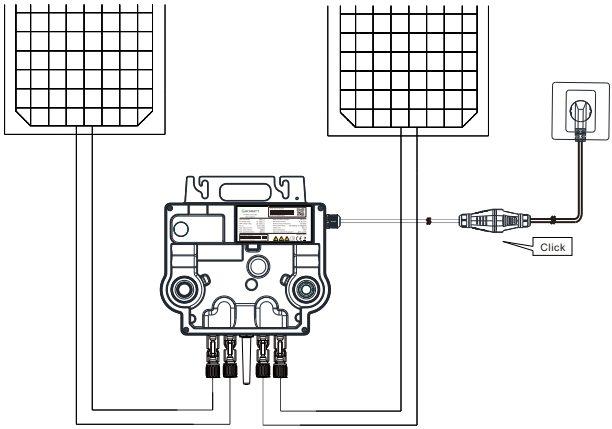

Step 5. Power on the system

Upon the completion of electrical connections, the system will start generating power in about two minutes.

Step 6. Set up the monitoring system

Please refer to the NEO WiFi Configuration Quick Guide to set up the monitoring system. Product information is subject to change without notice. (Please download the latest documents at www.ginverter.com)

Step 7. Check the installation (For qualified installer only)

No.		Check items	Y/N
1	DC	All DC connectors are connected securely	
2	AC	The AC cable is securely connected with the AC adapter cable	
3		The ground wire is properly installed (optional)	
4	Monitor	The monitoring system is working properly	

5 Troubleshooting

NOTICE	All faults are reported to ShinePhone APP or GROWATT Sever webpage. For details, please refer to GROWATT ShineServer Webpage.

Should any technical problems occur during installation and operation, qualified personnel can refer to the following instructions to rectify the fault.

5.1 Error Message

An error message will be displayed on ShinePhone APP when a fault occurs. The faults can be divided to the system fault and the inverter fault.

Please have the following information ready when contacting Growatt support:

- Serial number
- Model number
- Error code
- Grid voltage
- DC input voltage
- Has this problem occurred in the past?
- What were the ambient conditions like when the problem occurred?

Information concerning the PV panels:

- Manufacturer name and model number of the PV panel
- Output power of the panel
- Voc of the panel
- Vmp of the panel
- Imp of the panel

If it is necessary to replace the unit, please ship it in the original box.

5.2 System faults

System faults generally occur due to an exception in the system rather than the microinverter. Please check the items as instructed below before replacing the inverter.

Event code	Description	Suggestion
PV Voltage High Error: 202(1~2)	The PV input voltage exceeds the upper threshold. 202(1): PV1 Voltage High 202(2): PV2 Voltage High	1. Check if the voltage of each PV module is below 60V with a multimerter. 2. If the DC input voltage is within the permissible range and the error message persists, please contact Growatt support.

Event code	Description	Suggestion
PV Isolation Low Error: 203	Insulation problem	1. Check if the inverter is properly grounded. 2. Check the insulation of PV cables. 3. Check the impedance between PV (+) / PV (-) and ground (must be more than 2KΩ). If the values mentioned above are within the permissible range and the error message persists, please contact your dealer or Growatt customer service.
No PV connection Warning:220	220(1): No PV1 connection 220(2): No PV2 connection	Check the PV wiring.
AC V Outrange Error: 300(1~7)	300(1~3): Grid under-voltage 300(4~6): Grid over-voltage 300(7): 10-minute average over-voltage	1. Check the AC wiring, especially the neutral and ground wires. 2. Check if the grid voltage is within the permissible range. 3. Restart the inverter. If problem persists, please contact your dealer or Growatt customer service.
No AC connection Error: 302	No AC connection	1. Check the AC wiring. 2. Check the status of the AC breaker
AC F Outrange Error: 304	304(1~2,7): Grid under-frequency 304(3~4,6): Grid over-frequency 304(5): ROCOF Fault	1. Check the AC wiring, especially the neutral and ground wire. 2. Check if the grid frequency is within the permissible range. 3. Restart the inverter. If problem persists, please contact your dealer or Growatt customer service.

5.3 Inverter faults

Error code	Meanings	Suggestion
Error: 409	409(1): BUS instantaneous voltage is below 250V 409(2): BUS instantaneous voltage is over 500V	1. If the alarm occurs occasionally and the microinverter still work properly, no special treatment is required. 2. If the error occurs frequently and cannot be recovered, please contact your dealer or Growatt customer service.
Error: 408	Over or Under Temperature	If the ambient temperature of inverter is lower than 65°C, restart the inverter. If the error message persists, please contact your dealer or Growatt customer service.
Error 416	Device failure	Please contact your dealer or Growatt customer service.

5.4 LED Indicator Status

The LED indicator flashes at start-up. Steady green indicates a successful startup.

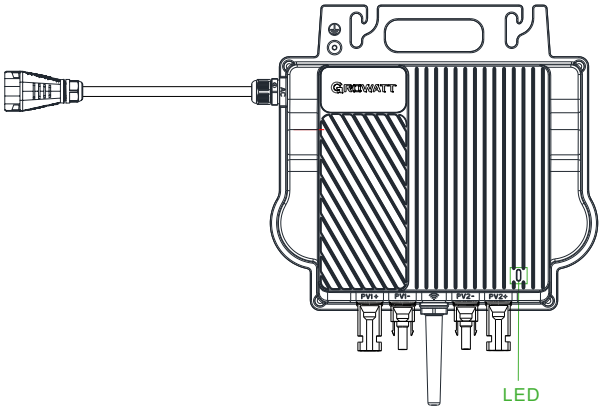

System status	Indicator status	Description
Waiting	Flashing green (on for 1s and off for 5s)	Requirements are not met: PV voltage is not within the start-up range; phase locking fails; grid voltage or frequency is not within the permissible range
Countdown for grid-connection	Flashing green (on for 1s and off for 1s)	When the requirements are met, the microinverter will count down to connect to the grid.
Grid-tied	Steady green	Successfully connected to the grid, the router and two PV modules
	Flashing green (on for 5s and off for 5s)	Successfully connected to the grid, but failed to connect to the router
Fault	Steady red	Hardware damaged
	Flashing red (on for 1s and off for 1s)	Recoverable fault caused by the field environment
Programming	Flashing orange (on for 1s and off for 1s)	Update firmware online

The microinverter is powered by PV modules. If the LED indicator is off, please check the DC side connection. If the connection is correct and the PV voltage is higher than 16V, contact your distributor or Growatt customer service.

5.5 Microinverter Replacement

WARNING	➢ Do not attempt to repair the Microinverter by yourself. Please contact the local technical support. ➢ Never disconnect the PV connectors under load. Ensure that no current presents in the DC cables prior to disconnecting. ➢ Always disconnect AC breaker before disconnecting the PV module from the Microinverter.
CAUTION	**Danger of burn injuries due to hot enclosure parts!** ➢ Wait 15 minutes before removing the until the enclosure cools down.

1. Replace the NEO Microinverter in the following order:
a) Disconnect the AC adapter cable from the socket.
b) Remove the PV module from the rack, and cover the PV module.
c) Disconnect the AC cable from the AC adapter cable.
d) Disconnect the DC connectors from the microinverter.
e) Disconnect the ground cable between the microinverter and the rack.
2. Install the new unit to the rack.
3. Connect a ground cable between the microinverter and the rack.
4. Connect the DC connectors to the new microinverter.
5. Connect the AC cable with the AC adapter cable.
6. Connect the AC adapter cable to the socket and check the running status of the Microinverter.
7. Add the new device on the ShinePhone APP or the Growatt ShineServer Webpage to update the relevant information. Replace the label with the serial number of the new unit on the installation map.

6 Warranty

Please refer to the warranty card or other relevant documents.

7 Decommissioning

7.1 Removing the Microinverter

1 Disconnect the microinverter from all power sources.
2 Remove all cables connected to the microinverter.
3 Remove the microinverter from the rack.

7.2 Packing the Microinverter

If the original packing box is available, please put the microinverter in its original carton and secure it with tension belts. If it is no longer available, you can also use an equivalent carton. The box must be capable of being closed completely and made to support both the weight and the size of the inverter.

7.3 Storage and Transportation

To store or transport the NEO Microinverter, it is recommended to place it in the original packing carton. A maximum of 4 carton boxes can be stacked.

➢ If you opt to store the microinverter in your warehouse, please select an appropriate location. The storage temperature should be always between -40℃ and +65℃. Keep the storage relative humidity lower than 95%.

➢ After long-term storage, the local installer or personnel from Growatt service department should perform a comprehensive test before installation.

7.4 Disposal

	Do not dispose of faulty microinverters or accessories together with household waste. Please comply with the disposal regulations for electronic waste which apply at the installation site.

Technical Data 8

8.1 Specifications

Specifications \ Model	600	800	1000
Input data (DC)			
Max. DC voltage	60V		
Start voltage	16V		
Nominal voltage	16-60V		
MPP voltage range	28-60		
No. of MPP trackers	2		
No. of PV module per MPP trackers	1/1		
Max. input current per MPP tracker	18A		
Max. short-circuit current per MPP tracker	23A		
Output data (AC)			
AC nominal power	600W	800W	1000W
Max. AC apparent power	600VA	800VA	1000VA
Nominal AC voltage/range*	230V/180-253V		
AC grid frequency/range*	50Hz/60Hz		
Rated output current	2.61A	3.48A	4.35A
Max. output current	6.2A	8.3A	10.4A
Max. inverter backfeed current to PV array	0A		
Power factor(@nominal power)	0.8 leading … 0.8 lagging		
THDi	<3% @Full Load		
AC grid connection type	Single phase		
Overvoltage category	PV:II AC:III		
Efficiency			
Max. efficiency	97.3%		
CEC efficiency	96.7%		
MPPT efficiency	99.5%		

Specifications \ Model	600	800	1000
Protection			
DC reverse-polarity protection	Integrated		
AC surge protection	Type III		
AC short-circuit protection	Integrated		
Ground fault monitoring	Integrated		
Grid monitoring	Integrated		
Anti-islanding protection	Integrated		
General data			
Dimensions (W/H/D) in mm	270mm×252mm×41.5mm		
Weight	3.1kg		
Operating temperature range	–40 °C ... +65°C		
Noise emission (typical)	≤ 25 dB(A)		
Altitude	4000m		
Night Power Consumption	30mW		
Topology	Isolated High Frequency Transformers , Galvanically Isolated		
Cooling	Natural convection		
Protection degree	IP67 (NEMA 6)		
Relative humidity	0~100%		
DC connection	MC4 & equivalent		
AC connection	Quick connector		
Interfaces			
Display	LED+APP		
WIFI/RF	WiFi		
Warranty:10/15 years	Yes/ Optional		
Certificates and approvals			
Grid regulation	N4105; EN50549; IEC61727&IEC62116		

Specifications \ Model	600	800	1000
EMC	EN 61000-6-1; EN 61000-6-2; EN 61000-6-3; EN 61000-6-4		
Safety	IEC/EN62109-1, IEC/EN62109-2; RED		
Place of production	Made in China		

All specifications are subject to change without notice.
* The AC Voltage and Frequency Range may vary depending on specific country grid standard.

8.2 DC connector info

DC connector	VP-D4/ MC4 (opt)

8.3 Torque

Grounding Screw	0.8 N·m

9 Contact

If you have technical problems about our products, you can contact Growatt Service Line or visit Growatt official website to leave a message.

Shenzhen Growatt New Energy Co., Ltd

4-13/F, Building A, Sino-German (Europe) Industrial Park,
Hangcheng Ave, Bao'an District, Shenzhen, China

T +86 755 2747 1942
E service@ginverter.com
W www.ginverter.com

Download
Manual

Growatt New Energy

Shenzhen Growatt New Energy Co., Ltd
4-13/F, Building A, Sino-German (Europe) Industrial Park,
Hangcheng Ave, Bao'an District, Shenzhen, China
T +86 755 2747 1942
E service@ginverter.com
W www.ginverter.com

GR-UM-342-A-00